INTERNATIONAL AND FLORIDA BUILDING CODES ENGINEERING EVALUATION REPORT

Report Number	0093-40	Issue Date	2026-09-23
Client	ENGAGE BUILDING PRODUCTS INC.	Issue Number	4-6137
Address	101-4441 76th Ave SE, Calgary, AB T2C 2G8	Expiry Date	2027-12-31

SUBJECT

Engage Building Products Inc., Quickpanel Systems with 4mm Aluminum Composite Material (ACM) panel exterior cladding system.

EVALUATION SCOPE

This report is provided to assist registered design professionals and building officials in the United States with determining compliance to the performance objectives in the named building codes. The product(s) described herein have been evaluated to the:
2024 International Building Code (IBC); 2024 International Residential Code (IRC);
2026 Florida Building Code (FBC); 2026 Florida Residential Code (FBC-R).

CSI DIVISION: 07 00 00 THERMAL AND MOISTURE PROTECTION
SUBDIVISIONS: 07 42 43 Composite Wall Panels

CODE SECTIONS AND STANDARDS

IBC Section	Description	Referenced Standard or Code Section[1]	Year
104.2.2.4	Determination of Compliance, Tests	-	-
718.2.6	Exterior Wall Coverings	NFPA 285	2023
1402.2	Exterior Walls, Weather Protection	-	-
1402.3	Exterior Walls, Wind Resistance	IBC Ch 16	-
1402.6	Exterior Walls, Water Resistive Barriers	NFPA 285	2023
1406	Metal Composite Materials (MCM)	-	-
1406.2	Exterior Wall Covering	IBC 1406.4 - 1406.13	-
1406.4	Structural Design	IBC Ch 16	-
1406.5	Approval	-	-
1406.6	Weather Resistance	IBC 1402	-
1406.7	Durability	-	-
1406.9	Surface Burning Characteristics	ASTM E84	2021a
1406.10	Type I, II, III, IV Construction	-	-
1406.10.1	Surface Burning Characteristics	ASTM E84	2021a
1406.10.2	Thermal Barriers	-	-
1406.10.3	Full Scale Tests	NFPA 285	2023
1406.11	Type V Construction	-	-
1406.13	Labeling	IBC 1703.5	-

1609.1.1	Determination of Wind Loads	ASCE 7	2022
1709.3	Load Test Procedures Not Specified	ASTM E330	2014(21)
2002.1	Aluminum General	AA ADM 1 & Ch 16	2020
2603.5.5	Vertical and Lateral Fire Propagation	NFPA 285	2023
CH 35	Referenced Standards	ASTM E331	2000(16)
IRC Section	**Description**	**Referenced Standard or Code Section[1]**	**Year**
R301.1.3	Engineered Design	-	-
R302	Fire Resistance Ratings	ASTM E119	2020
R703.1.1	Exterior Covering, Water Resistance	ASTM E331	2000(16)
R703.1.2	Exterior Covering, Wind Resistance	ASTM E330	2014(21)
R703.1.2	Exterior Covering, Wind Resistance	Table R301.2.1(1) & R301.2.1(2)	-
R703.3	Wall Covering Nominal Thickness and Attachments	Table R703.3(1)	-
R703.3.2	Wind Limitations	Table R703.3.2, R301.2.1(1) & R301.2.1(2)	-

1. Only the applicable reference standards and code sections sited in the main body text are listed. (-) indicates that the main body text covers the full explanation of the objective.

Compliance Statement: It is the opinion of Boca Engineering Co. that Quickpanel Systems with 4mm ACM when installed as described in this report, has demonstrated compliance with the listed sections of the named building codes. Design and performance information can be found in the Product Evaluation section this report.

This report has been prepared and reviewed on behalf of Boca Engineering Co. by:

Ruite Qiang, Ph.D., E.I.T.

Christopher Bowness, P.Eng., P.E.

2026-09-23
Issue Date

2027-12-31
Expiry Date

CHRISTOPHER W.C. BOWNESS
LICENSE
No. 64748
FILE 0064
STATE OF
FLORIDA
PROFESSIONAL ENGINEER

EVALUATION REPORT TERMS

1. This report is a general evaluation of the building code section requirements as identified and applies only to the samples that were evaluated. It does not imply any endorsement or warranty, nor that the signatory Engineer is the Designer of Record of any construction project for which the information is used.
   Rule 61G20-3 (17)(a) Definition: Evaluation report means a report based upon testing or comparative or rational analysis, or a combination thereof, from an approved product evaluation entity or a licensed Florida professional engineer or architect indicating that the product was evaluated to be in compliance with the Code or the intent of the Code and that the product complies with the Code or is, for the purpose intended, at least equivalent to that required by the Code.
2. This Evaluation Report expires 2027-12-31, open to renewal. Up to the renewal date, the report is valid until such time as the named product(s) changes, the Quality Assurance Agency changes, or provisions of the Code that relate to the product change.

CERTIFICATION OF INDEPENDENCE

1. Boca Engineering Co., it's employees and shareholders, do not have, nor do they intend to or will acquire, a financial interest in any company manufacturing or distributing products that they evaluate.
2. Boca Engineering Co. is not owned, operated, or controlled by any company manufacturing or distributing products that they evaluate.

Contents

PRODUCT EVALUATION 4
1.0 PRODUCT DESCRIPTION 4
2.0 INSTALLATION 4
3.0 CODE SECTIONS REVIEW 5
4.0 LIMITATIONS 8
5.0 FIRE CLASSIFICATION 8
6.0 MANUFACTURING PLANTS, LABELING AND QUALITY ASSURANCE 8
7.0 REFERENCE TESTING AND EVALUATION DOCUMENTS 9
ATTACHMENTS 10
ATTACHMENT 1: QUICKPANEL SYSTEMS WIND PRESSURE ASSEMBLY TABLES & DIAGRAMS 10
ATTACHMENT 2: ASSEMBLY DIAGRAMS 15
ATTACHMENT 3: DISCUSSION OF TESTING AND DESIGN EVALUATION PROCEDURE 29
ATTACHMENT 4: INTERNATIONAL TO STATE CODE CROSS-REFERENCES 31
FLORIDA: 2026 FLORIDA BUILDING CODE (FBC) 31
FLORIDA: 2026 FLORIDA RESIDENTIAL CODE (FBC-R) 32

PRODUCT EVALUATION

1.0 PRODUCT DESCRIPTION

Quickpanel Systems are aluminum composite panels with back framing stiffeners affixed to wall framing, serving as an exterior wall covering.

Aluminum Composite Material (ACM): The composite panel is nominally 4mm in thickness, composed of an inside and outside skin of nominal 0.5mm thick aluminum sheets bonded to a nominal 3mm thickness inner core of polyethylene with mineral (magnesium hydroxide) fire-retardant, and available in lengths of up to 16 ft.

Sub-framing Stiffeners and Trims: The stiffeners and trims are two-piece 6063-T6 aluminum shaped in to the dimensions shown in the part drawings in the appendix.

Fasteners and Adhesives: The fastener used to attach stiffener backplate to framing is #10-12 x 1-1/2" HWH Self Drilling Screw. Stiffener top cap to panel attachment is either 1) Silicone adhesive with 1/16" x 1" Double-sided tape, or 2) Two strips of 1/16" x 1" Double-sided tape.

ACM panels are held in place with adhesive and the flanges of the snap-fit top cap of the edge trims, and adhered to the back-framing stiffeners.

Table 1: QuickPanel Material Properties

Material	Specification / Grade
Sub-framing Stiffeners & Trims	Aluminum Grade: 6063-T6 Min. Tensile Yield: 25,000 psi Stiffener Top Cap: Mill finish Stiffener Back Plate: Powder Coated All other parts: Powder Coated
Aluminum Composite (ACM) Panels	4 mm total thickness 3 mm FR Core 0.5 mm 3000 Series Aluminum Skins Paint/Finish: PVDF AAMA 2605
	Certified to ICC-ES AC25 by an accredited product certification agency[1]
Silicone	ASTM C920 Type S, Grade NS, Class 50, Use NT, G, and A, and ASTM C1184, Peel Adhesion tested with Aluminum
3M Double-sided tape	VHB RP+160GF
3M Tape Primer	Isopropyl alcohol

1. ACM panels supplied to ENGAGE are certified by the International Code Council's ICC-ES or an ICC-IAS accredited product certification body and labeled as meeting ICC-ES AC 25, *Acceptance Criteria for Metal Composite Material*.

2.0 INSTALLATION

2.1. Exterior cladding shall be installed in accordance with the respective state building code, manufacturer's published instructions and this report, subject to the limitations in section 4.0 LIMITATIONS.

2.2. Wall framing construction and water-resistive barrier for which the cladding is to be installed over shall be designed and installed in accordance with the respective state building code.

2.3. Assembly installation details that have been assessed:

a. Table 2 in ATTACHMENT 1: QUICKPANEL SYSTEMS WIND PRESSURE ASSEMBLY TABLES, and
b. Assembly diagrams in ATTACHMENT 2: ASSEMBLY DIAGRAMS.

3.0 CODE SECTIONS REVIEW

IBC Section	Description
104.2.2.4	**Determination of Compliance, Tests** Tests conducted to demonstrate evidence of code compliance are by "test methods specified in this code or by other recognized test standards" as instructed by IBC 104.2.2.4.
718.2.6	**Exterior Wall Coverings** Complies with exception 3: Fire blocking is not required since Quickpanel has been tested to and meets NFPA 285 conditions. See 5.0 FIRE CLASSIFICATION of this report.
1402.2	**Exterior Walls, Weather Protection** A representative wall construction assembly with Quickpanel installed on light-frame construction with a water-resistive barrier and flashing as described in this evaluation report has been tested to and met the criteria of AAMA 508-21, *Voluntary Test Method and Specification for Pressure Equalized Rain Screen Wall Cladding Systems* at a test pressure of 6.2 psf to confirm that the wall assembly prevents accumulation of water and has an adequate means of drainage.
1402.3	**Exterior Walls, Wind Resistance** The structural design loads described in this report are in accordance with Ch 16 of the IBC.
1402.6	**Water Resistive Barriers** Quickpanel exterior walls on building of type I, II, III, or IV construction that are greater than 40ft above grade with *water-resistive barrier* have been tested to NFPA 285. See 5.0 FIRE CLASSIFICATION of this report.
1406	**Metal Composite Materials (MCM)** See commentary to 1406 sub-sections.
1406.2	**Exterior Wall Covering** Quickpanel Systems used as an *exterior wall covering* comply with Sections 1406.4 through 1406.13.
1406.4	**Structural Design** The structural design analysis conducted in this report is in accordance with Ch 16 of the IBC. Testing, strength and serviceability of the cladding system have been assessed following provisions in Aluminum Association AA ADM-20, *Aluminum Design Manual*.
1406.5	**Approval** This evaluation report of *approved* tests and engineering analysis may be submitted to the *building official* to verify compliance with the requirements of Chapter 16 for wind *loads.*
1406.6	**Weather Resistance**

Quickpanel Systems complies with Section 1402 and is designed and constructed to resist wind and rain in accordance with this section and the manufacture's installation instructions. Also, see commentary to IBC 1402.2.

1406.7 Durability

Quickpanel Systems are constructed of generally *approved* materials commonly used in exterior construction and regarded as to maintain the performance characteristics required in Section 1406 for the duration of use. Validation of the core components having evidence of durability to variable and enduring climate conditions has been made accordingly.
Product components were tested to the following standards:

- 3M Tape was tested to ASTM E2264-level 3: 14x 12-hour cycles of -33° F - +180° F, adhered panels were then assessed for no evidence of warping or attachment failures.
- ACM panel bond testing meets ICC-ES AC 25- section 4.6 *Freeze-thaw criteria*: 10x freeze thaw cycles of: exposure to air 120°F for 8 hours, submersion in water at 75 °F for 8 hours, exposure to air at -20 °F for 16 hours. The conditioned panels are assessed to show no evidence of delamination and bond tested to ASTM D1781 and to receive an average peel torque value of equal to or greater than 22.5 inch-pounds per inch.
- Silicone: The specified silicone is labeled as meeting ICB Ch. 35 referenced standard ASTM C920, *Standard Specification for Elastomeric Joint Sealants*, as well as meeting ASTM C1184, *Standard Specification for Structural Silicone Sealants*. ASTM C1184 contains several tests assessing durability aspects, including: 1) Integrity after 21-days of heat aging at 190 ° F, 2) Testing minimum 50 psi tensile strength at i) 190 ° F, ii) -20 ° F, iii) after 7-days of water immersion, iv) after 5000 hrs of simulated UV light exposure.
- Trims have been tested to ASTM B117 1000 hrs test.

1406.9 Surface Burning Characteristics

See commentary to IBC 1406.10.1

1406.10 Type I, II, III, IV Construction

Where installed on *buildings* of Types I, II, III and IV construction, Quickpanel Systems complies with Sections 1406.10.1 and 1406.10.2 for installations up to 40 feet (12, 192 mm) above *grade plane.* Installations above 40 ft have not been assessed.

1406.10.1 Surface Burning Characteristics

Quickpanel Systems have a *flame spread index* of no more than 25 and a *smoke-developed index* of not more than 450 when tested in accordance with ASTM E84.

1406.10.2 Thermal Barriers

Quickpanel Systems must be separated from the interior of a *building* by an *approved* thermal barrier consisting of ½- inch (12.7 mm) *gypsum wallboard* or material that meet the requirements of NFPA 275.

1406.10.3 Full Scale Tests

Quickpanel Systems is tested in accordance with and complies with, the NFPA 285 Acceptance Criteria, and has been tested on the max thickness of panel intended for use. See 5.0 FIRE CLASSIFICATION of this report.

1406.11 **Type V Construction**
Quickpanel Systems are permitted to be installed on *buildings* of Type V construction.

1406.13 **Labeling**
Quickpanel Systems are *labeled* in accordance with Section 1703.5.

1609.1.1 **Determination of Wind Loads**
Wind load pressure (psf) applied to the cladding for use with the design values published in this report are determined in accordance with Chapter 30 of ASCE 7.

1709.3 **Load Test Procedures Not Specified**
The load test procedure in IBC-referenced standard ASTM E330 and design load factors in IBC 1709.3.1 were used in this evaluation.

2002.1 **Aluminum General**
The design of structural components using aluminum material complies with AA ADM 1.

2603.5.5 **Vertical and Lateral Fire Propagation**
The exterior wall assembly has been tested and assessed in accordance with and to comply with the acceptance criteria of NFPA 285.

CH 35 **Referenced Standards**
ASTM E331, *Standard Test Method for Water Penetration of Exterior Windows, Skylights, Doors, and Curtain Walls by Uniform Static Air Pressure Difference,* was performed according to AAMA 508 section 6.1, and run for fifteen minutes at a specified pressure of 6.2 psf and a water spray rate of at least 5.0 U.S. gal/ft^2 per hour, having no water penetration through the backside of the assembly. ASTM E331 is a referenced standard in IBC 2024.

IRC Section **Description**

R301.1.3 **Engineered Design**
Engineered design in accordance with the International Building Code is permitted for buildings and structures and parts thereof included in the scope of International Residential Code.

R302 **Fire Resistance Ratings**
See 5.0 FIRE CLASSIFICATION of this report.

R703.1.1 **Exterior Covering, Water Resistance**
Same as this report commentary to IBC 1402.2.

R703.1.2 **Exterior Covering, Wind Resistance**
The load test procedure and load factors in IBC referenced standard ASTM E330 were used to determine allowable wind pressure.
Allowable wind pressure values published in this report may be used with Tables R301.2.1(1) and R301.2.1(2) for walls using an effective wind area of 10 square feet.

R703.3 **Wall Covering Nominal Thickness and Attachments**

QuickPanel Systems with 4mm Aluminum Composite Material (ACM) panel exterior cladding system the nominal thickness of 0.1575 inches, is not addressed by the International Residential Code. Therefore, its use is permitted under engineered design in accordance with IRC Section R301.1.3 Engineered Design.

The design of this cladding system shall be in accordance with the International Building Code (IBC), including IBC Section 1406 Metal Composite Materials.

R703.3.2 **Wind Limitations**

Where wind pressure exceeds 30 psf, see published allowable pressures in this report and further commentary to sections R703.1.2 and Table R703.3(1).

4.0 LIMITATIONS

1. This evaluation is for the base code requirements of the building system as addressed in this report. In some building applications, additional performance objectives may be required by code which must be addressed in the building design for those specific cases.
2. Design calculations, drawings, and special inspections are to be furnished for building projects by registered professionals as required by the respective jurisdictional authorities and codes.
3. The scope of evaluation does not include loads acting on Quickpanel exterior cladding due to earthquakes.
4. Wall assemblies with Quickpanel systems, to achieve the wall assembly water-resistance performance standards as stated in this report, must be constructed with the components of water-resistive barrier per IBC 1403.2, and flashing per IBC 1404.4.
5. Screws must be corrosion-resistant in accordance with IBC 1404.5.
6. Wall framing and sheathing to which the siding is attached must be designed and installed for the applicable wind pressure and other climate and occupancy loads as required by code for the construction project. Where framing and sheathing details are provided in this report, they represent the minimum tested or calculated materials for the required strength of attachment for the wall cladding. The wall framing structural design and performance is outside the scope of this report.

5.0 FIRE CLASSIFICATION

Summary of fire performance classifications found by testing to code referenced standards:

ASTM E84: Flame Spread Index (FSI): < 25, Smoke Developed Index (SDI): < 450, Class A

NFPA 285: Testing and compliance is specific to the installation details that were tested. See BOCA report 0093-9 for more information.

ASTM E119: Testing and compliance is specific to the installation details that were tested. See BOCA report 0093-42 for more information.

The ACM panels are classified as combustible material.

6.0 MANUFACTURING PLANTS, LABELING AND QUALITY ASSURANCE

The products evaluated in this report are surveyed at the approved manufacturing locations with third-party quality assurance inspections and labeling by Intertek. The manufacturing plants of siding materials covered in this evaluation report are located in: Calgary, AB. Labeling shall be in accordance with the requirements of the 2024 IBC, and the Accredited Quality Assurance Agency.

7.0 REFERENCE TESTING AND EVALUATION DOCUMENTS

Entity	Entity Accreditation[1]	Standards	Report No.	Issue Date
Boca Eng.	Note 2	ASTM E330	0093-31	2025-11-17
Intertek	IAS TL-274	AAMA 508	106028953COQ-010	2025-05-13
Intertek	IAS TL-274	ASTM E331	106028953COQ-010	2025-05-13
Engage	Note 3	ICC-ES AC 25 and ASTM E84	QCM2025-06-10[3]	2025-06-10
Intertek	IAS TL-144	ASTM E2264	L6017.01-201-44 R0[4]	2020-12-21
Intertek	IAS TL-274	ASTM B117	105849866COQ-001	2025-01-08
Boca Eng.	Note 2	NFPA 285	0093-9	2025-12-02
Boca Eng.	Note 2	ASTM E119	0093-42	2025-12-31
Intertek	AA-647	Quality Assurance	Spec ID: 87183	2026-09-23

1. Testing, certification, evaluation, and inspection agencies referenced have been verified to be accredited by the International Accreditation Service (www.iasonline.org) for the applicable scope, in good standing on the date of the evaluation, in accordance with ISO 17025 and ISO 17020 international standards for testing and inspection bodies.
2. Professional Engineer sealed report.
3. Quickpanel's purchasing specifications in QC documents requires the ACM panels to conform to ICC-ES AC25 which includes the ASTM E84 testing.
4. Test was performed for 3M and provided to ENGAGE with permission to use the data.

ATTACHMENTS

ATTACHMENT 1: QUICKPANEL SYSTEMS WIND PRESSURE ASSEMBLY TABLES & DIAGRAMS

The Quickpanel Systems wind pressures tables have been developed to assist users with determining appropriate installation details for a range of wall construction components, building dimension plans, and site and environmental conditions. At any building height, when the Allowable Pressure (ASD) has been pre-determined by the designer or building official, the user only needs to check that the installation detail is shown as capable of that pressure or greater.

Wind speed conversion tables have been prepared following the design methodology of ASCE7-22, Ch. 30.3, for low-rise buildings with a maximum height of 60 ft, for enclosed buildings with topographic and elevation factors set to unity. These settings are typical of many installations, and consistent with the prescriptive approach used in IRC Table R301.2.1(1). All conditions must be consistent with *Table* and the details within the wind speed conversion tables to be considered valid. If the actual site, building dimension or climatic conditions (including the given variables) differ from those prescribed, the allowable pressure values may be used to calculate adjusted wind speed limits.

For building heights over 60 ft, the Allowable Pressure (ASD) values listed in the wind uplift tables may be used by a licensed design professional to calculate ultimate wind speed and/or allowable height for the given product installation detail and building project conditions.

At any building height, when the Allowable Pressure (ASD) has been pre-determined by the designer or building official, the user only needs to check that the installation detail is shown as capable of that pressure or greater.

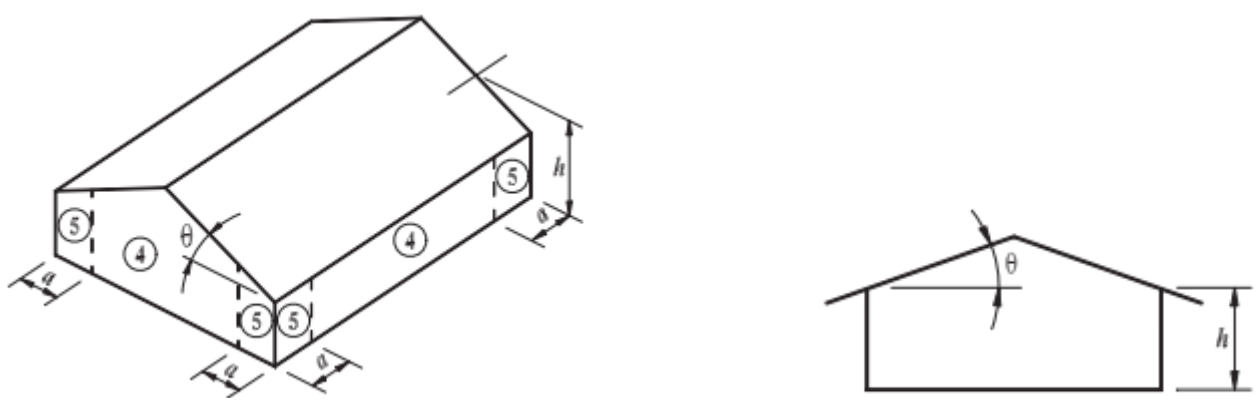

a = 10% of least horizontal dimension or 0.4h, whichever is smaller, but not less than either 4% of least horizontal dimension or 3 ft (0.9 m).

Exception: For buildings with θ = 0° to 7° and a least horizontal dimension greater than 300 ft (90 m), dimension a shall be limited to a maximum of 0.8h.

h = Mean roof height, in ft (m), except that eave height shall be used for θ ≤ 10°.

θ = Angle of plane of roof from horizontal, in degrees.

***Figure 1**. Wind Pressure Diagrams as Represented in ASCE7-22 for use in conjunction with Tables 2 and 3*

Table 2-4, Notes:

1. The siding has been tested to the published allowable pressures at the respective bending limitation of L/180 for wall heights up to 10 ft. Where framing and sheathing details are provided in these tables, this represents only the minimum tested or calculated materials for the required strength of attachment of the cladding. Primary structural building loads and capacity of the building framing is outside the scope of this table and must be designed and installed for the applicable wind, climate and occupancy loads as required by the code for the construction project. See ATTACHMENT 3 of the report for further discussion.
2. Further assembly details per Tables 2 and additional details in the assembly diagrams of this report to be followed.
3. Steel framing minimum yield strength of 33 ksi and 18 ga (43 mil) thickness, unless noted otherwise. The framing members may be substituted with i) any larger section dimension of the same material, ii) greater yield strength, and/or, iii) greater gauge thickness.
4. The structural framing and sheathing shall be designed and anchored to provide lateral bracing and properly transfer all loads to the structure. Framing design and installation is the responsibility of the engineer or architect of record for the project of installation.
5. Gypsum Sheathing (Gyp.) must comply with ASTM C1177 and be rated by the manufacturer for exterior use; gypsum thickness may not be increased.
6. Fasteners supplied with Quickpanel cladding must be used. Metal screws to conform to ASTM C1513.
7. Adhesives as specified in this report: i) Tape: 3M VHB RP+160GF double-sided tape, ii) Silicone: Labeled as compliant with ASTM C920 Type S, Grade NS, Class 50, Use NT, G, and A, and ASTM C1184.
8. Refer to manufacturer's data for information regarding adhesive's acceptable application temperature range of the atmosphere and substrate materials.
9. Allowable pressure (psf) (ASD) represents tested assembly ultimate pressure divided by a safety factor of 2.5.
10. Allowable wind pressure (ASD), as defined in ASCE 7-22 2.4.1 as 0.6W. To convert to Factored Design Resistance Pressure (psf) (LRFD), multiply Allowable Pressure (psf) (ASD) by 1.67.
11. Interpolation not permitted. For heights in between those listed, use the next highest height column.
12. Table limiting heights and wind velocity values are for low-rise buildings of maximum 60 ft height, developed in accordance with ASCE7-22, Table 30.3-1. Design input values: GCp = -1.4 (Zone 5) and -1.1 (Zone 4), GCpi = 0.18, Kzt = 1, Kd = 0.85, Ke = 1, Iw = 1.0.
13. Wind exposure categories as defined in ASCE7-22, section 26.7.
14. Wind speed conversion corresponds to the maximum Zone 4 and 5 pressure with an effective area of 10 ft^2. Table wind speeds are only valid under the design conditions stated. For other site conditions and/or building dimensions, designers can use the published Allowable Pressure (psf) (ASD) to determine allowable wind speeds with IRC Table R301.2.1(1) or calculations to IBC Ch 16.
15. Based on the test results, when comparing equivalent assemblies for positive and negative pressure walls, the negative pressure was taken as the worst-case condition for the allowable design load.
16. Refer to detail A/9 for adhesive layout between stiffener and ACM panel, including number and placement of tape strips and silicone bead.

www.bocaengineering.com BOCA ENGINEERING CO. info@bocaengineering.com
Greater Victoria Area: (250) 477-7777 203-1001 Cloverdale Ave., Victoria BC V8X 4C9
Metro Vancouver: (604) 385-5210 1567 Brearley St., White Rock BC V4B 3M6

Table 2: Wind Assembly Details with Quickpanel 4 mm ACM – 2024 IBC; 2026 FBC Height Limit of 10 ft, Bending Defection Limit of L/180[1,15]						
Assembly Number[2]	**Stiffener Configuration[2]**	**Framing[3,4]**	**Sheathing[5]**	**Fastener - backplate into framing[6]**	**Adhesive – stiffener to ACM panel[7,8]**	**Allowable Pressure (psf) (ASD)[9,12]**
QG5	No stiffeners	2x6 18 ga 33 ksi steel stud @16"o/c	½" Drywall	#10 – 12 x 1-1/2" metal screw	NA	36
QI1	Horizontal, spaced @ 24" o/c	2x6 18 ga 33 ksi steel stud @16"o/c	½" Drywall	#10 – 12 x 1-1/2" metal screw	2-strips tape[16]	56
QI3	Horizontal, spaced @ 12" o/c	2x6 16 ga 50 ksi steel stud @16"o/c	½" Drywall	#10 – 12 x 1-1/2" metal screw	2-strips tape[16]	109
QI4	Horizontal, spaced @ 24" o/c	2x6 16 ga 50 ksi steel stud @16"o/c	½" Drywall	#10 – 12 x 1-1/2" metal screw	2-strips tape[16]	86
QI5	Horizontal, along center line of panel	2x6 16 ga 50 ksi steel stud @16"o/c	½" Drywall	#10 – 12 x 1-1/2" metal screw	2-strips tape[16]	58
QI6	Horizontal, along center line of panel	2x6 18 ga 33 ksi steel stud @16"o/c	½" Drywall	#10 – 12 x 1-1/2" metal screw	2-strips tape[16]	58
QI7	2-Horizontal, along center line 2-5/8"apart	2x6 16 ga 50 ksi steel stud @16"o/c	½" Drywall	#10 – 12 x 1-1/2" metal screw	2-strips tape[16]	73
QI9	Horizontal, spaced @ 12" o/c	2x6 18 ga 33 ksi steel stud @16"o/c	½" Drywall	#10 – 12 x 1-1/2" metal screw	2-strips tape[16]	85
QI8	Horizontal, along center line of panel	2x6 16 ga 50 ksi steel stud @16"o/c	½" Drywall	#10 – 12 x 1-1/2" metal screw	1-strip tape, 1-bead silicone[16]	49
QI2	Horizontal, spaced @ 24" o/c	2x6 18 ga 33 ksi steel stud @16"o/c	½" Drywall	#10 – 12 x 1-1/2" metal screw	1-strip tape, 1-bead silicone[16]	85
QI10	Horizontal, spaced @ 24" o/c	2x6 16 ga 50 ksi steel stud @16"o/c	½" Drywall	#10 – 12 x 1-1/2" metal screw	1-strip tape, 1-bead silicone[16]	85

See pages 10-11 for User's Guide and Table Notes.

Table 3: Maximum Wind Speeds of Wall Cladding Installed at Various Building Heights and Exposure Categories – 2024 IBC; 2026 FBC Non-HVHZ[1,12,15]

Assembly No.[10]	Allowable Pressure (psf) (ASD)[9,12]	Exposure Category[13]	ZONE 5 (CORNER) Maximum Wind Speed V_{ult} (mph)[14] Building Height (ft)[11]							ZONE 4 (FIELD) Maximum Wind Speed V_{ult} (mph)[14] Building Height (ft)[11]						
			15	20	25	30	40	50	60	15	20	25	30	40	50	60
QG5	36	B	175	168	163	158	154	149	145	194	186	181	175	171	165	161
		C	143	139	136	133	130	127	124	159	155	151	148	144	141	138
		D	130	127	125	123	120	117	115	145	141	139	136	133	130	128
QI1	56	B	210	209	203	197	192	185	181	210	210	210	210	210	206	201
		C	179	174	170	166	162	158	155	199	193	189	185	180	175	172
		D	162	159	156	153	149	146	144	180	176	173	170	166	162	160
QI3	109	B	210	210	210	210	210	210	210	210	210	210	210	210	210	210
		C	210	210	210	210	210	210	210	210	210	210	210	210	210	210
		D	210	210	210	210	208	204	201	210	210	210	210	210	210	210
QI4	86	B	210	210	210	210	210	210	210	210	210	210	210	210	210	210
		C	210	210	210	206	200	196	192	210	210	210	210	210	210	210
		D	201	196	193	190	185	181	178	210	210	210	210	205	201	198
QI5	58	B	210	210	206	200	195	189	184	210	210	210	210	210	210	204
		C	182	177	173	169	164	161	158	202	196	192	188	183	178	175
		D	165	161	158	156	152	149	147	184	179	176	173	169	165	163
QI6	58	B	210	210	206	200	195	189	184	210	210	210	210	210	210	204
		C	182	177	173	169	164	161	158	202	196	192	188	183	178	175
		D	165	161	158	156	152	149	147	184	179	176	173	169	165	163
QI7	73	B	210	210	210	210	210	210	206	210	210	210	210	210	210	210
		C	204	198	194	190	184	180	177	210	210	210	210	205	200	197
		D	185	181	178	175	170	167	164	206	201	197	194	189	185	183
QI9	85	B	210	210	210	210	210	210	210	210	210	210	210	210	210	210
		C	210	210	209	205	199	194	191	210	210	210	210	210	210	210
		D	200	195	192	188	184	180	177	210	210	210	209	204	200	197
QI2	85	B	210	210	210	210	210	210	210	210	210	210	210	210	210	210
		C	210	210	209	205	199	194	191	210	210	210	210	210	210	210
		D	200	195	192	188	184	180	177	210	210	210	209	204	200	197
QI8	49	B	204	196	190	184	179	173	169	210	210	210	205	199	193	188
		C	167	162	159	156	151	148	145	186	180	177	173	168	164	161
		D	152	148	146	143	140	137	135	169	165	162	159	155	152	150
QI10	85	B	210	210	210	210	210	210	210	210	210	210	210	210	210	210
		C	210	210	209	205	199	194	191	210	210	210	210	210	210	210
		D	200	195	192	188	184	180	177	210	210	210	209	204	200	197

See pages 10-11 for User's Guide and Table Notes.

Table 4 & Figure 1 below provide assembly solutions for various panel sizes including stud wall details, type of stiffener required and maximum stiffener spacing, under different wind pressure ranges. The details are extracted from the tested and engineered solutions in Table 2. The panel sizes are limited to a maximum of 5 ft in width and 10 ft in height.

Table 4: Minimum QuickPanel Panel Stiffeners for Negative Wind Pressures – 2024 IBC; 2026 FBC Non-HVHZ

Panel Size[1,11]		Minimum Number of Stiffeners Per Panel and Maximum Stiffener Spacing (in)																			
		Negative Wind Pressure (ASD)[9]																			
		35 PSF					36 – 60 PSF					61 – 85 PSF					86 – 109 PSF				
Height (ft) \ Width (ft)		1	2	3	4	5	1	2	3	4	5	1	2	3	4	5	1	2	3	4	5
1	Quantity	NS	NS	NS	NS	NS	NS	NS	NS	NS	NS	NS	NS	NS	NS	NS	NS	NS	NS	NS	NS
	Spacing	-	-	-	-	-	-	-	-	-	-	-	-	-	-	-	-	-	-	-	-
2	Quantity	NS	NS	NS	NS	NS	NS	NS	NS	NS	NS	NS	NS	NS	NS	NS	1	1	1	1	1
	Spacing	-	-	-	-	-	-	-	-	-	-	-	-	-	-	-	12"	12"	12"	12"	12"
3	Quantity	NS	NS	NS	NS	NS	NS	NS	NS	NS	NS	1	1	1	1	1	2	2	2	2	2
	Spacing	-	-	-	-	-	-	-	-	-	-	18"	18"	18"	18"	18"	12"	12"	12"	12"	12"
4	Quantity	NS	NS	NS	NS	NS	NS	NS	NS	NS	NS	1	1	1	1	1	3	3	3	3	3
	Spacing	-	-	-	-	-	-	-	-	-	-	24"	24"	24"	24"	24"	12"	12"	12"	12"	12"
5	Quantity	NS	NS	NS	NS	NS	NS	NS	NS	NS	NS	2	2	2	2	2	4	4	4	4	4
	Spacing	-	-	-	-	-	-	-	-	-	-	20"	20"	20"	20"	20"	12"	12"	12"	12"	12"
6	Quantity	NS	NS	NS	NS	NS	1	1	1	1	1	2	2	2	2	2	5	5	5	5	5
	Spacing	-	-	-	-	-	36"	36"	36"	36"	36"	24"	24"	24"	24"	24"	12"	12"	12"	12"	12"
7	Quantity	NS	NS	NS	NS	NS	1	1	1	1	1	3	3	3	3	3	6	6	6	6	6
	Spacing	-	-	-	-	-	42"	42"	42"	42"	42"	21"	21"	21"	21"	21"	12"	12"	12"	12"	12"
8	Quantity	NS	NS	NS	NS	NS	1	1	1	1	1	3	3	3	3	3	7	7	7	7	7
	Spacing	-	-	-	-	-	48"	48"	48"	48"	48"	24"	24"	24"	24"	24"	12"	12"	12"	12"	12"
9	Quantity	NS	NS	NS	NS	NS	1	1	1	1	1	4	4	4	4	4	8	8	8	8	8
	Spacing	-	-	-	-	-	54"	54"	54"	54"	54"	22"	22"	22"	22"	22"	12"	12"	12"	12"	12"
10	Quantity	1	1	1	1	1	1	1	1	1	1	4	4	4	4	4	9	9	9	9	9
	Spacing	60"	60"	60"	60"	60"	60"	60"	60"	60"	60"	24"	24"	24"	24"	24"	12"	12"	12"	12"	12"
Substrate Details[2,3,4,6]		2x6 18 ga 33ksi steel studs @16" O.C., #10 x 1 x 1/2" screw					2x6 18 ga 33ksi steel studs @16" O.C. , #10 x 1 x 1/2" screw					2x6 16 ga 50ksi steel studs @16" O.C. , #10 x 1 x 1/2" screw					2x6 16 ga 50ksi steel studs @16" O.C. , #10 x 1 x 1/2" screw				
Stiffener Adhesive[7,8,16]		Double Sided Tape					Double Sided Tape					Double Sided Tape					Double Sided Tape				

See pages 10-11 for User's Guide and Table Notes.

*NS = No panel stiffener required.

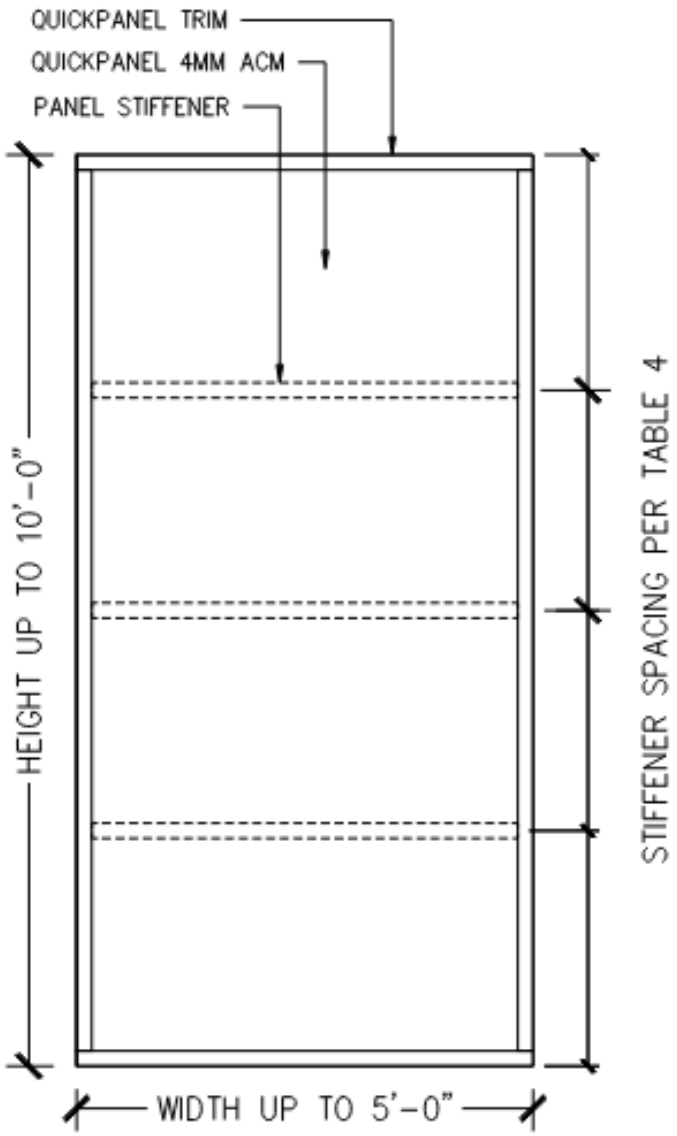

Figure 1. QuickPanel panel size and stiffener spacing diagram

ATTACHMENT 2: ASSEMBLY DIAGRAMS

Begins next page.

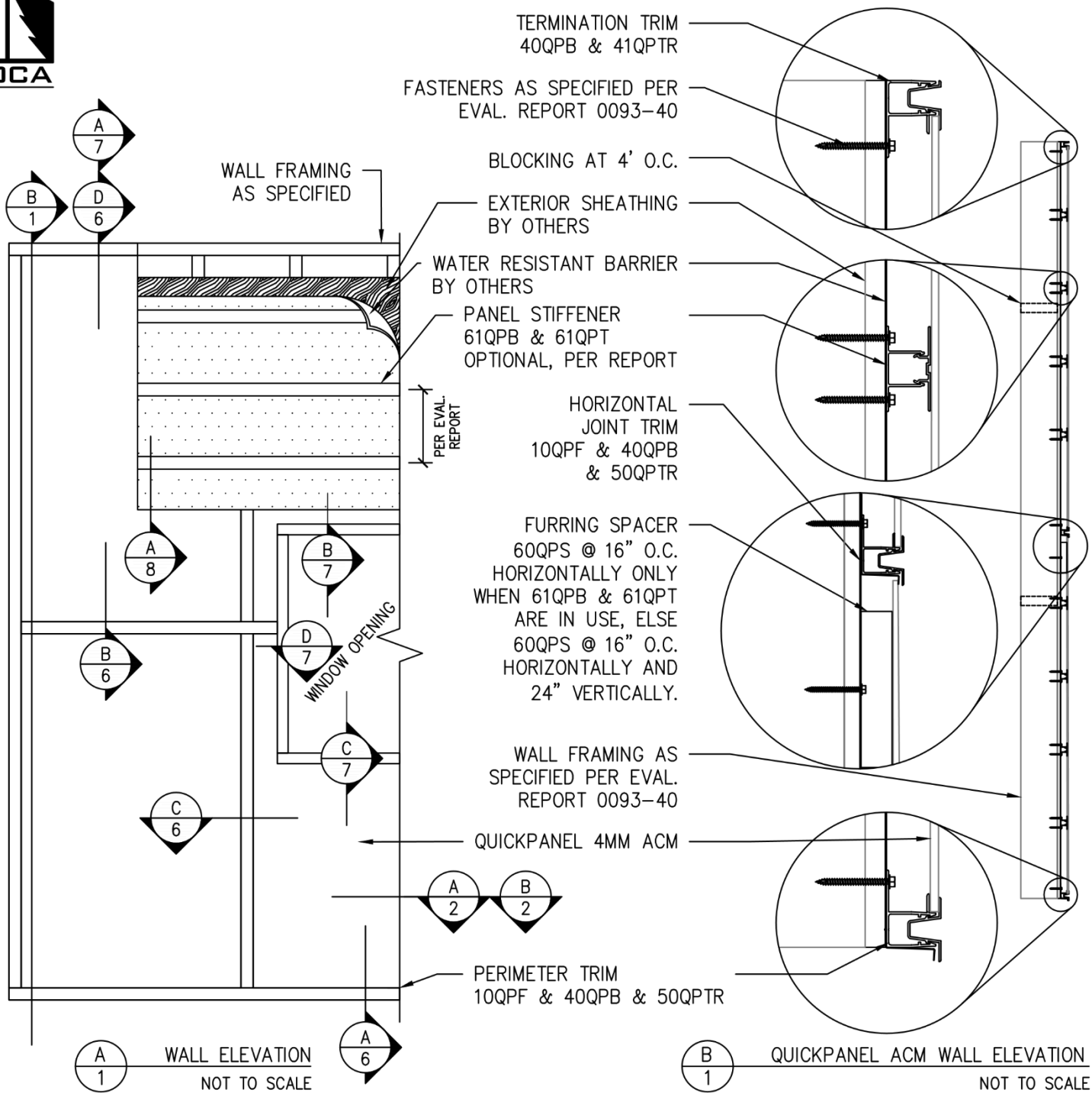

COPYRIGHT © 2026 RESERVED. THESE PLANS AND DESIGNS ARE AT ALL TIMES THE PROPERTY OF BOCA ENGINEERING TO BE USED FOR THE PROJECT SHOWN. WRITTEN CONSENT IS REQUIRED FROM THE ENGINEER BEFORE ANY REPRODUCTION.

BOCA ENGINEERING CO. | SPAR STRUCTURAL & CIVIL CONSULTANTS	DATE SEPTEMBER 23, 2026		4 REV.	FOR PUBLICATION ISSUE			CB APP
	DRAWING NO. 0093–6137–SK1	SHEET NO. 1 OF 13	SCALE NOT TO SCALE		DES. TH	DRN. RQ	CHK. CB
CLIENT ENGAGE BUILDING PRODUCTS INC. QUICKPANEL SYSTEMS	PROJECT QUICKPANEL ACM 4MM IBC AND FBC PRODUCT EVALUATION REPORT		TITLE GENERAL INSTALLATION ASSEMBLY DIAGRAMS				

DRAWING FOR ENGINEERING EVALUATION REPORT 0093–40

NOT FOR USE AS CONSTRUCTION DESIGN DOCUMENTS

www.bocaengineering.com BOCA ENGINEERING CO. info@bocaengineering.com
Greater Victoria Area: (250) 477-7777 203-1001 Cloverdale Ave., Victoria BC V8X 4C9
Metro Vancouver: (604) 385-5210 1567 Brearley St., White Rock BC V4B 3M6

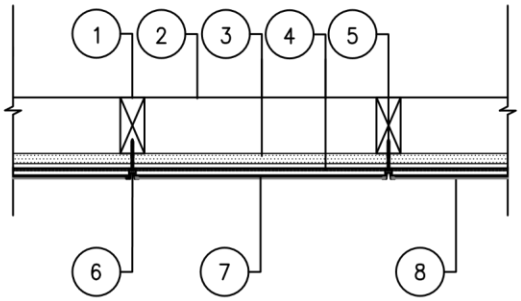

A/2 QUICKPANEL OVER WOOD STUDS

NOT TO SCALE

LIGHT–FRAMED STUD WALL INSTALLATION INTERIOR TO EXTERIOR	
1	SPF No.2 WOOD STUDS @ 16" O.C. PER EVALUATION REPORT[3]
2	BLOCKING TO BE INSTALLED AT 4' O.C.
3	SHEATHING PER PER EVALUATION REPORT[3]
4	WATER RESISTIVE BARRIER TO CODE BY OTHERS
5	MIN. #12 1–½" METAL SCREWS PER EVAL REPORT[3]
6	QUICKPANEL TRIM PER DETAIL DRAWINGS ON PAGE 1
7	QUICKPANEL PANEL STIFFENER 61QPB & 61QPT
8	QUICKPANEL ACM PANEL

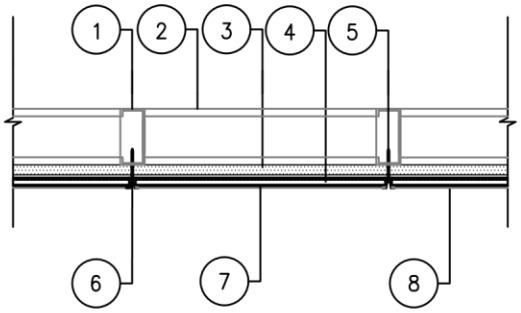

B/2 QUICKPANEL OVER STEEL STUDS

NOT TO SCALE

LIGHT–FRAMED STUD WALL INSTALLATION INTERIOR TO EXTERIOR	
1	STEEL STUDS @ 16" O.C. PER EVALUATION REPORT[3]
2	BLOCKING TO BE INSTALLED AT 4' O.C.
3	SHEATHING PER EVALUATION REPORT[3]
4	WATER RESISTIVE BARRIER TO CODE BY OTHERS
5	MIN. #12 1–½" METAL SCREWS PER EVAL REPORT[3]
6	QUICKPANEL TRIM PER DETAIL DRAWINGS ON PAGE 1
7	QUICKPANEL PANEL STIFFENER 61QPB & 61QPT
8	QUICKPANEL ACM PANEL

NOTE:
1. INTERIOR FINISH AND INSULATION TO CODE, NOT SHOWN FOR CLARITY.
2. FLASHING AT ALL PENETRATIONS TO CODE, NOT SHOWN FOR CLARITY.
3. REFER TO ENGINEERING EVALUATION REPORT: 0093–40

COPYRIGHT © 2026 RESERVED. THESE PLANS AND DESIGNS ARE AT ALL TIMES THE PROPERTY OF BOCA ENGINEERING TO BE USED FOR THE PROJECT SHOWN. WRITTEN CONSENT IS REQUIRED FROM THE ENGINEER BEFORE ANY REPRODUCTION.

BOCA ENGINEERING CO. | SPAR STRUCTURAL & CIVIL CONSULTANTS	DATE SEPTEMBER 23, 2026		4 REV.	FOR PUBLICATION ISSUE		CB APP
	DRAWING NO. 0093–6137–SK1	SHEET NO. 2 OF 13	SCALE NOT TO SCALE	DES. TH	DRN. RQ	CHK. CB
CLIENT ENGAGE BUILDING PRODUCTS INC. QUICKPANEL SYSTEMS	PROJECT QUICKPANEL ACM 4MM IBC AND FBC PRODUCT EVALUATION REPORT		TITLE GENERAL INSTALLATION ASSEMBLY DIAGRAMS			

DRAWING FOR ENGINEERING EVALUATION REPORT 0093–40

NOT FOR USE AS CONSTRUCTION DESIGN DOCUMENTS

www.bocaengineering.com BOCA ENGINEERING CO. info@bocaengineering.com
Greater Victoria Area: (250) 477-7777 203-1001 Cloverdale Ave., Victoria BC V8X 4C9
Metro Vancouver: (604) 385-5210 1567 Brearley St., White Rock BC V4B 3M6

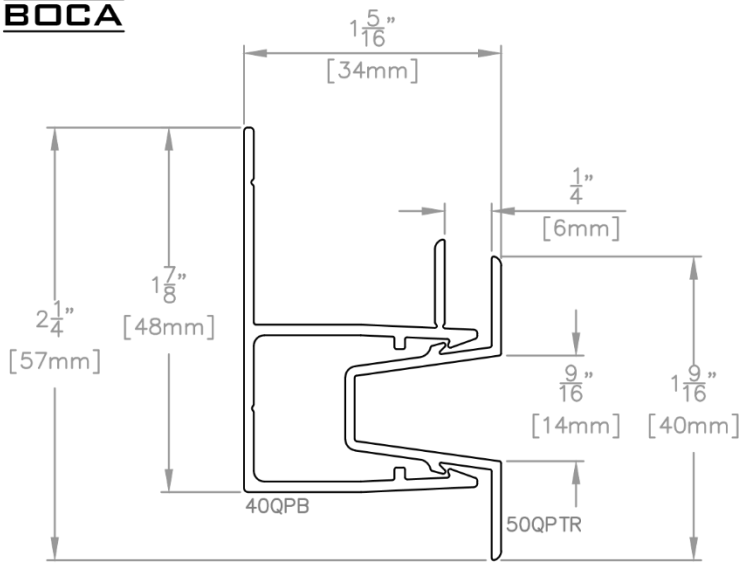

A/3 HORIZONTAL TRIM
NOT TO SCALE

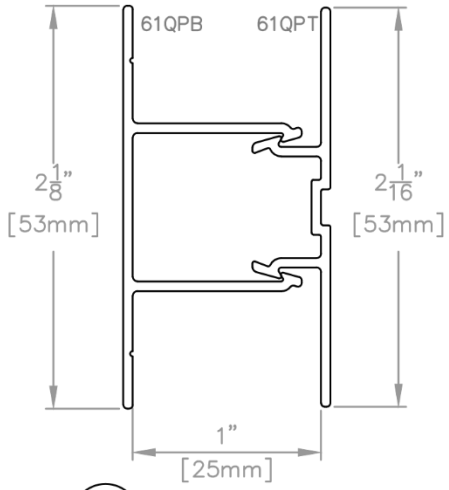

B/3 STIFFENER
NOT TO SCALE

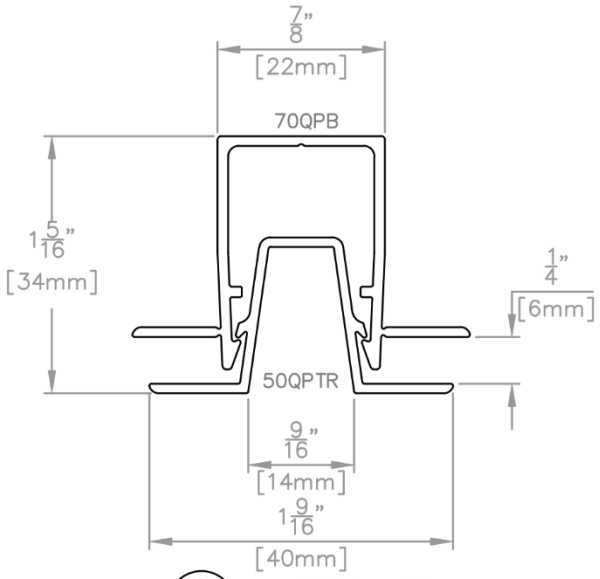

C/3 VERTICAL TRIM
NOT TO SCALE

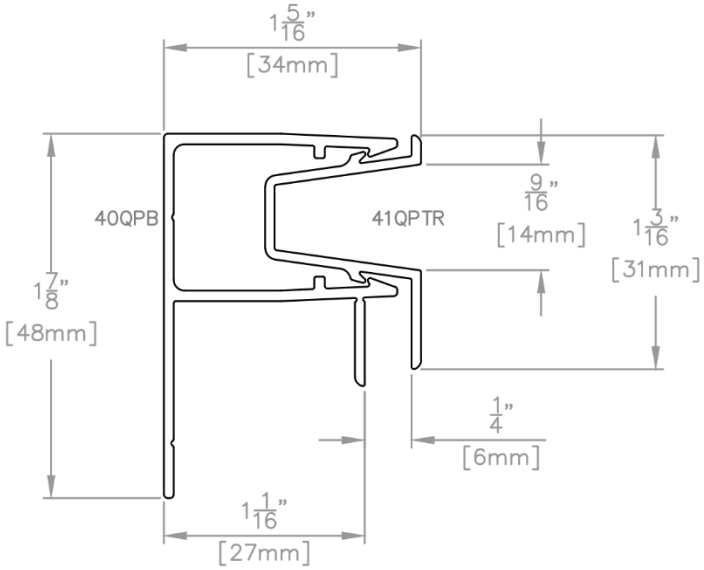

D/3 HORIZONTAL TERMINATION TRIM
NOT TO SCALE

COPYRIGHT © 2026 RESERVED. THESE PLANS AND DESIGNS ARE AT ALL TIMES THE PROPERTY OF BOCA ENGINEERING TO BE USED FOR THE PROJECT SHOWN. WRITTEN CONSENT IS REQUIRED FROM THE ENGINEER BEFORE ANY REPRODUCTION.

BOCA ENGINEERING CO. | SPAR STRUCTURAL & CIVIL CONSULTANTS	DATE: SEPTEMBER 23, 2026		4	FOR PUBLICATION		CB
			REV.	ISSUE		APP
	DRAWING NO.: 0093–6137–SK1	SHEET NO.: 3 OF 13	SCALE: NOT TO SCALE	DES.: TH	DRN.: RQ	CHK.: CB
CLIENT: ENGAGE BUILDING PRODUCTS INC. QUICKPANEL SYSTEMS	PROJECT: QUICKPANEL ACM 4MM IBC AND FBC PRODUCT EVALUATION REPORT		TITLE: GENERAL INSTALLATION ASSEMBLY DIAGRAMS			

DRAWING FOR ENGINEERING EVALUATION REPORT 0093–40

NOT FOR USE AS CONSTRUCTION DESIGN DOCUMENTS

www.bocaengineering.com BOCA ENGINEERING CO. info@bocaengineering.com
Greater Victoria Area: (250) 477-7777 203-1001 Cloverdale Ave., Victoria BC V8X 4C9
Metro Vancouver: (604) 385-5210 1567 Brearley St., White Rock BC V4B 3M6

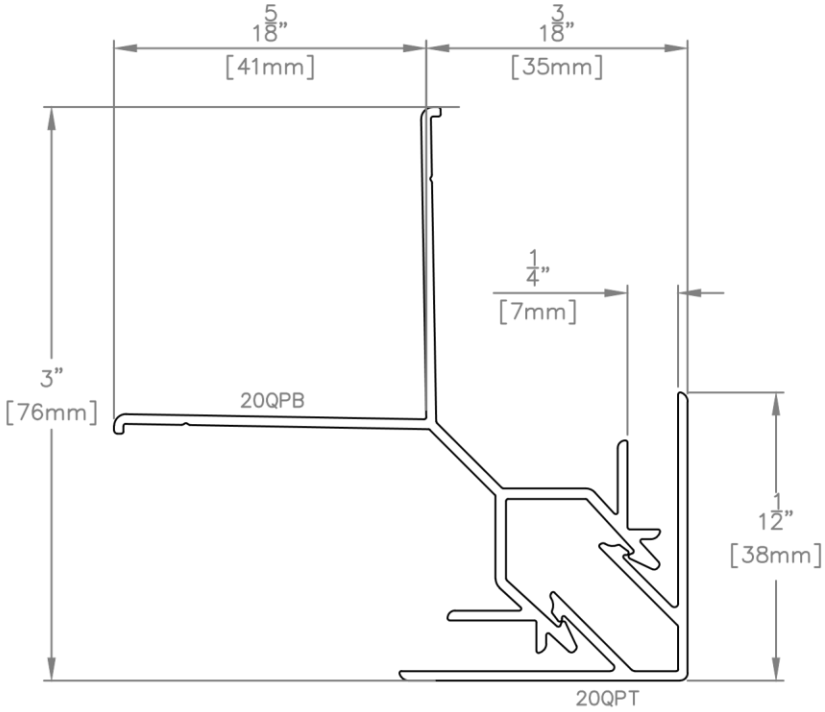

A/4 OUTSIDE CORNER TRIM
NOT TO SCALE

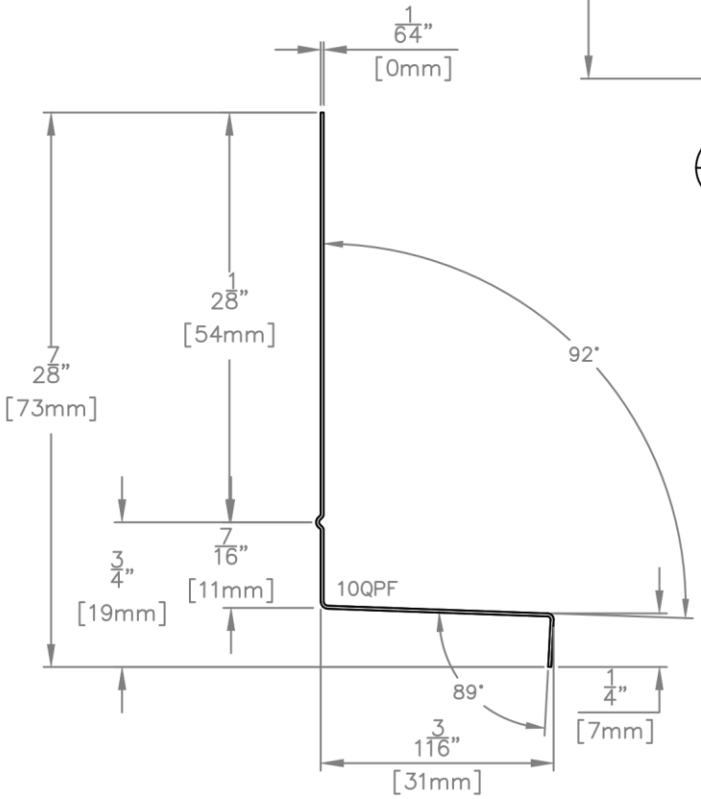

B/4 FLASHING Q04F
NOT TO SCALE

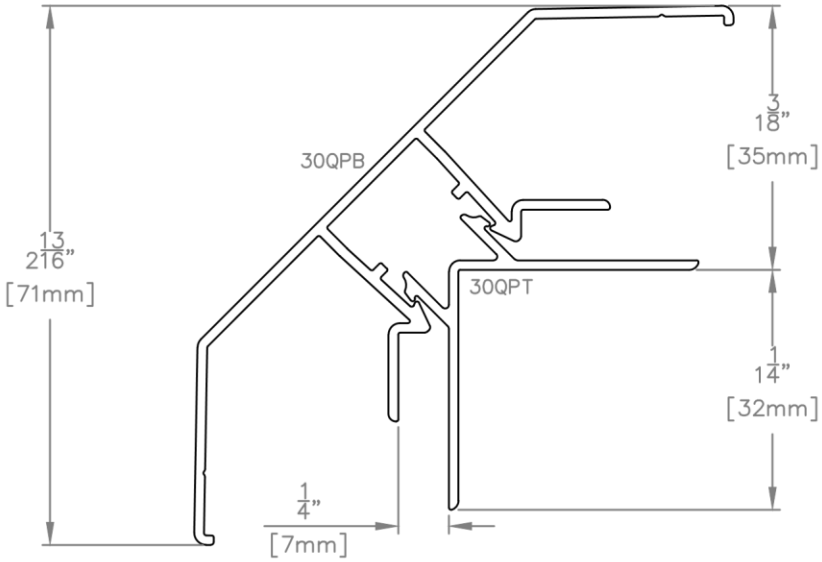

C/4 INSIDE CORNER TRIM
NOT TO SCALE

COPYRIGHT © 2026 RESERVED. THESE PLANS AND DESIGNS ARE AT ALL TIMES THE PROPERTY OF BOCA ENGINEERING TO BE USED FOR THE PROJECT SHOWN. WRITTEN CONSENT IS REQUIRED FROM THE ENGINEER BEFORE ANY REPRODUCTION.

BOCA ENGINEERING CO. | SPAR STRUCTURAL & CIVIL CONSULTANTS	DATE: SEPTEMBER 23, 2026		4	FOR PUBLICATION		CB
			REV.	ISSUE		APP
	DRAWING NO. 0093–6137–SK1	SHEET NO. 4 OF 13	SCALE: NOT TO SCALE	DES. TH	DRN. RQ	CHK. CB
CLIENT: ENGAGE BUILDING PRODUCTS INC. QUICKPANEL SYSTEMS	PROJECT: QUICKPANEL ACM 4MM IBC AND FBC PRODUCT EVALUATION REPORT		TITLE: GENERAL INSTALLATION ASSEMBLY DIAGRAMS			

DRAWING FOR ENGINEERING EVALUATION REPORT 0093–40

NOT FOR USE AS CONSTRUCTION DESIGN DOCUMENTS

www.bocaengineering.com BOCA ENGINEERING CO. info@bocaengineering.com
Greater Victoria Area: (250) 477-7777 203-1001 Cloverdale Ave., Victoria BC V8X 4C9
Metro Vancouver: (604) 385-5210 1567 Brearley St., White Rock BC V4B 3M6

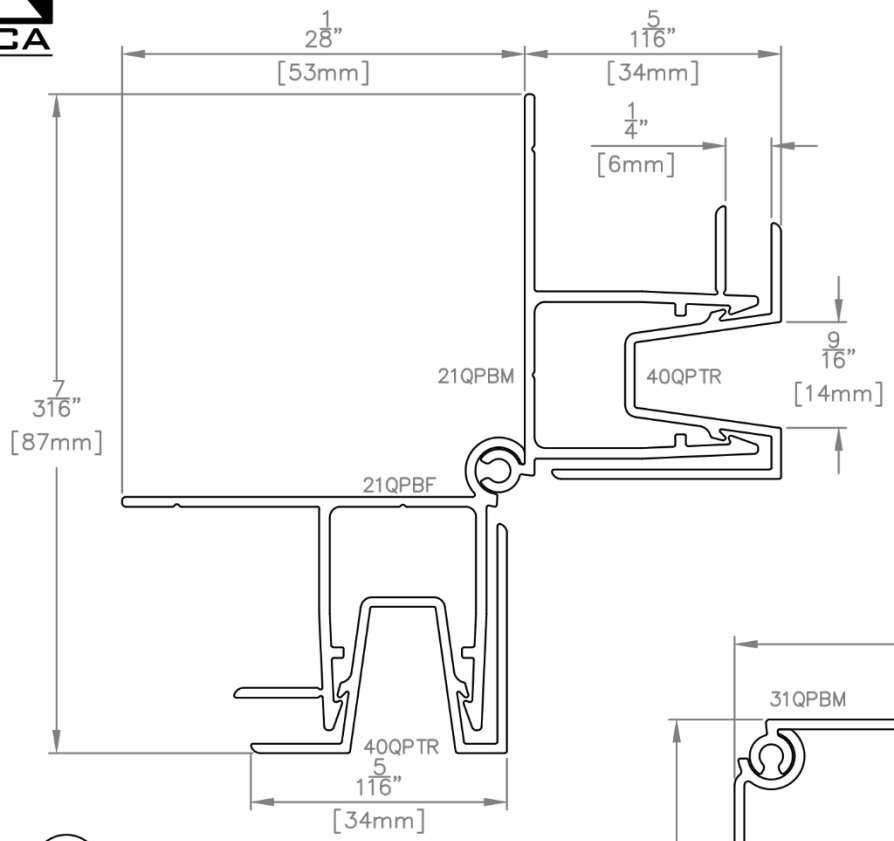

A/5 REVEAL MULTI–ANGLE OUTSIDE TRIM

NOT TO SCALE

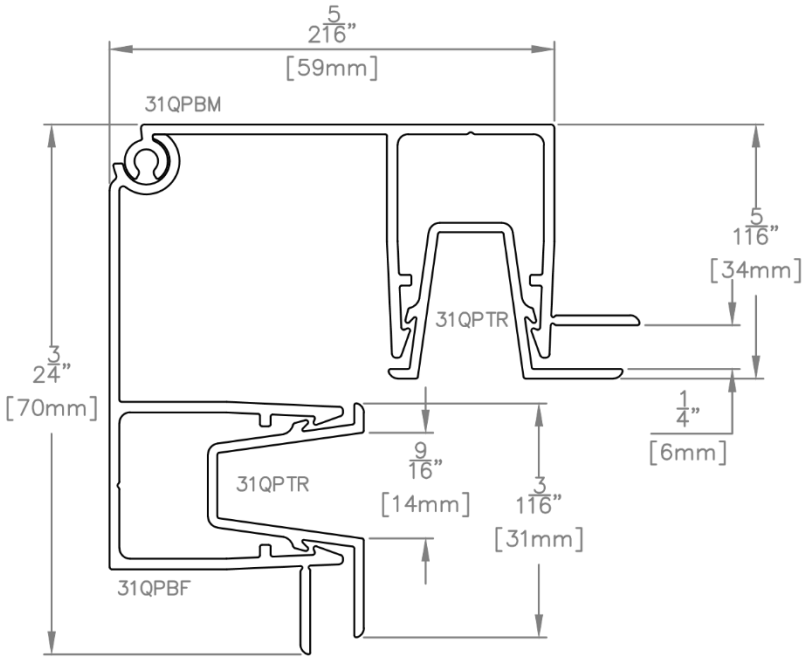

B/5 REVEAL MULTI–ANGLE INSIDE TRIM

NOT TO SCALE

COPYRIGHT © 2026 RESERVED. THESE PLANS AND DESIGNS ARE AT ALL TIMES THE PROPERTY OF BOCA ENGINEERING TO BE USED FOR THE PROJECT SHOWN. WRITTEN CONSENT IS REQUIRED FROM THE ENGINEER BEFORE ANY REPRODUCTION.

BOCA ENGINEERING CO. | SPAR STRUCTURAL & CIVIL CONSULTANTS	DATE SEPTEMBER 23, 2026		4	FOR PUBLICATION			CB
			REV.	ISSUE			APP
	DRAWING NO. 0093–6137–SK1	SHEET NO. 5 OF 13	SCALE NOT TO SCALE		DES. TH	DRN. RQ	CHK. CB
CLIENT ENGAGE BUILDING PRODUCTS INC. QUICKPANEL SYSTEMS	PROJECT QUICKPANEL ACM 4MM IBC AND FBC PRODUCT EVALUATION REPORT		TITLE GENERAL INSTALLATION ASSEMBLY DIAGRAMS				

DRAWING FOR ENGINEERING EVALUATION REPORT 0093–40

NOT FOR USE AS CONSTRUCTION DESIGN DOCUMENTS

www.bocaengineering.com BOCA ENGINEERING CO. info@bocaengineering.com
Greater Victoria Area: (250) 477-7777 203-1001 Cloverdale Ave., Victoria BC V8X 4C9
Metro Vancouver: (604) 385-5210 1567 Brearley St., White Rock BC V4B 3M6

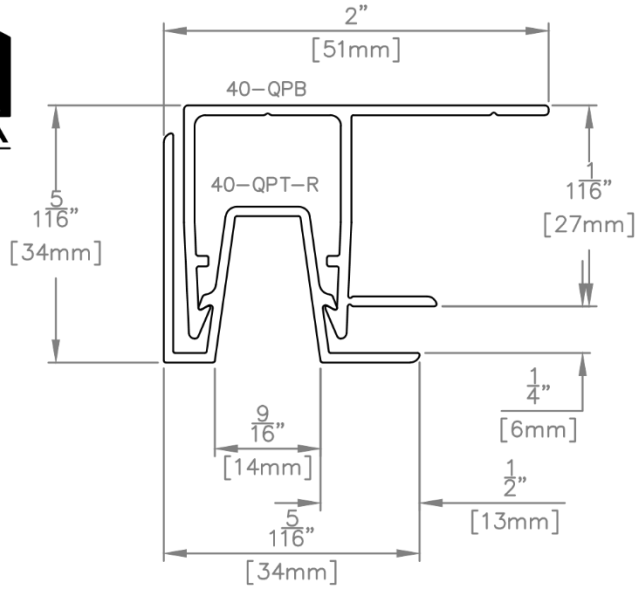

A/6 CORNER TERMINATION TRIM
NOT TO SCALE

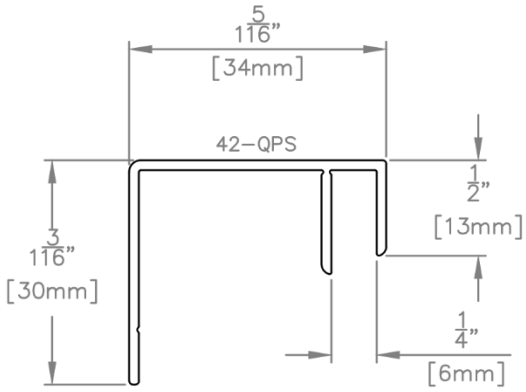

B/6 1 PIECE J TRIM
NOT TO SCALE

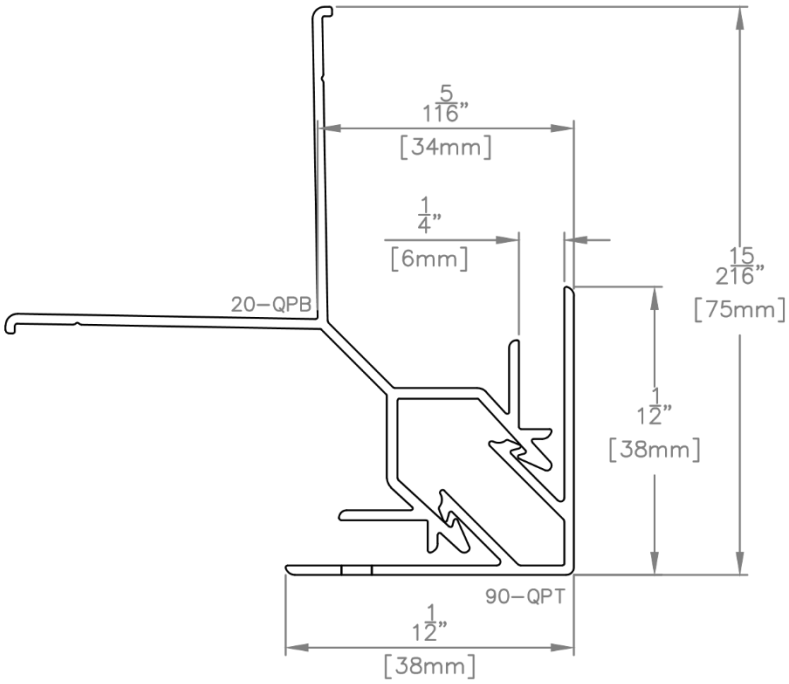

C/6 SOFFIT TRANSITION TRIM
NOT TO SCALE

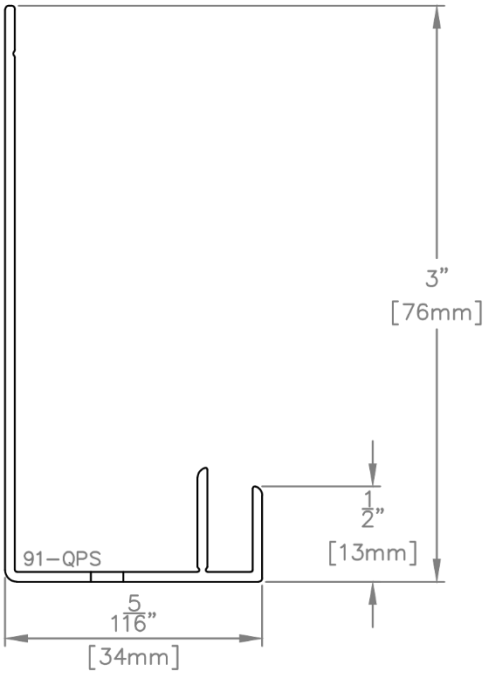

D/6 HORIZONTAL BOTTOM TERMINATION TRIM
NOT TO SCALE

COPYRIGHT © 2026 RESERVED. THESE PLANS AND DESIGNS ARE AT ALL TIMES THE PROPERTY OF BOCA ENGINEERING TO BE USED FOR THE PROJECT SHOWN. WRITTEN CONSENT IS REQUIRED FROM THE ENGINEER BEFORE ANY REPRODUCTION.

BOCA ENGINEERING CO. | SPAR STRUCTURAL & CIVIL CONSULTANTS	DATE SEPTEMBER 23, 2026		4 REV.	FOR PUBLICATION ISSUE			CB APP
	DRAWING NO. 0093–6137–SK1	SHEET NO. 6 OF 13	SCALE NOT TO SCALE		DES. TH	DRN. RQ	CHK. CB
CLIENT ENGAGE BUILDING PRODUCTS INC. QUICKPANEL SYSTEMS	PROJECT QUICKPANEL ACM 4MM IBC AND FBC PRODUCT EVALUATION REPORT		TITLE GENERAL INSTALLATION ASSEMBLY DIAGRAMS				

DRAWING FOR ENGINEERING EVALUATION REPORT 0093–40

NOT FOR USE AS CONSTRUCTION DESIGN DOCUMENTS

www.bocaengineering.com BOCA ENGINEERING CO. info@bocaengineering.com
Greater Victoria Area: (250) 477-7777 203-1001 Cloverdale Ave., Victoria BC V8X 4C9
Metro Vancouver: (604) 385-5210 1567 Brearley St., White Rock BC V4B 3M6

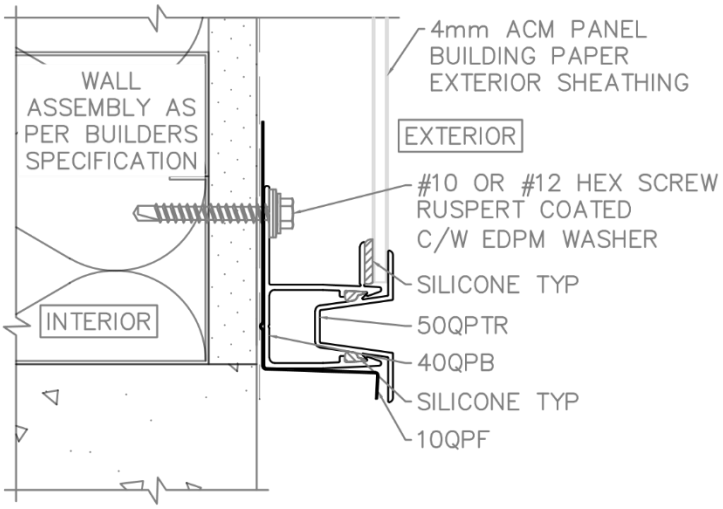

A/7 REVEAL PERIMETER STARTER DETAIL

NOT TO SCALE

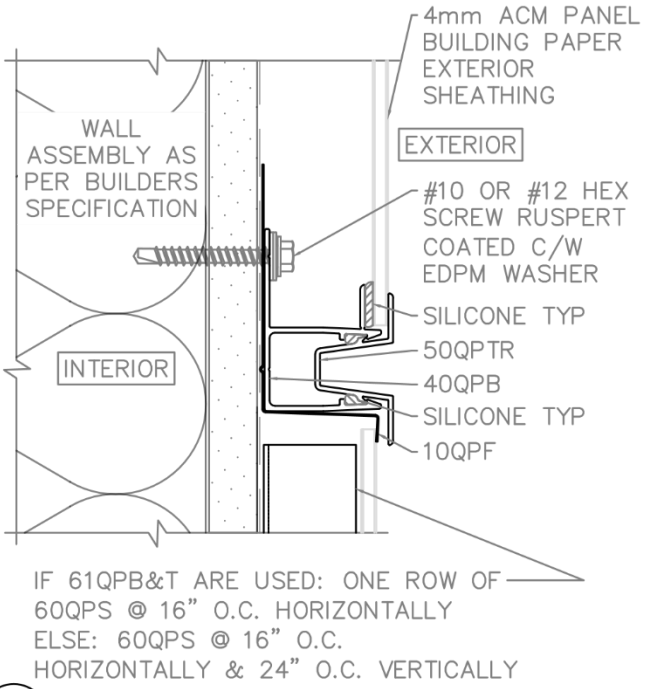

B/7 REVEAL HORIZONTAL MAINBODY DETAIL

NOT TO SCALE

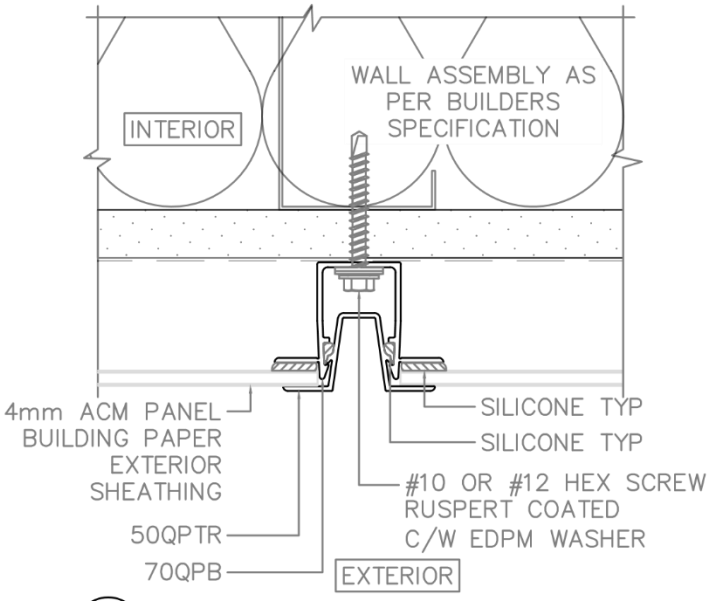

C/7 REVEAL VERTICAL MAINBODY DETAIL

NOT TO SCALE

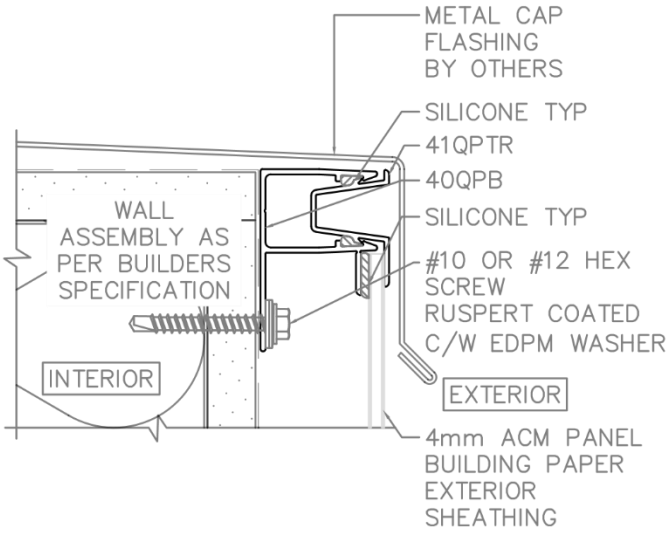

D/7 REVEAL PARAPET TERMINATION DETAIL

NOT TO SCALE

COPYRIGHT © 2026 RESERVED. THESE PLANS AND DESIGNS ARE AT ALL TIMES THE PROPERTY OF BOCA ENGINEERING TO BE USED FOR THE PROJECT SHOWN. WRITTEN CONSENT IS REQUIRED FROM THE ENGINEER BEFORE ANY REPRODUCTION.

BOCA ENGINEERING CO. | SPAR STRUCTURAL & CIVIL CONSULTANTS	DATE: SEPTEMBER 23, 2026		4	FOR PUBLICATION		CB
			REV.	ISSUE		APP
	DRAWING NO. 0093-6137-SK1	SHEET NO. 7 OF 13	SCALE: NOT TO SCALE	DES. TH	DRN. RQ	CHK. CB
CLIENT: ENGAGE BUILDING PRODUCTS INC. QUICKPANEL SYSTEMS	PROJECT: QUICKPANEL ACM 4MM IBC AND FBC PRODUCT EVALUATION REPORT		TITLE: GENERAL INSTALLATION ASSEMBLY DIAGRAMS			

DRAWING FOR ENGINEERING EVALUATION REPORT 0093-40

NOT FOR USE AS CONSTRUCTION DESIGN DOCUMENTS

www.bocaengineering.com BOCA ENGINEERING CO. info@bocaengineering.com
Greater Victoria Area: (250) 477-7777 203-1001 Cloverdale Ave., Victoria BC V8X 4C9
Metro Vancouver: (604) 385-5210 1567 Brearley St., White Rock BC V4B 3M6

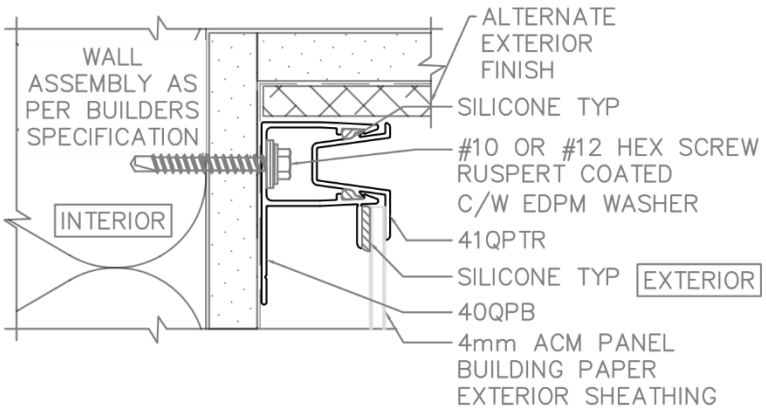

A/8 REVEAL SOFFIT TERMINATION DETAIL

NOT TO SCALE

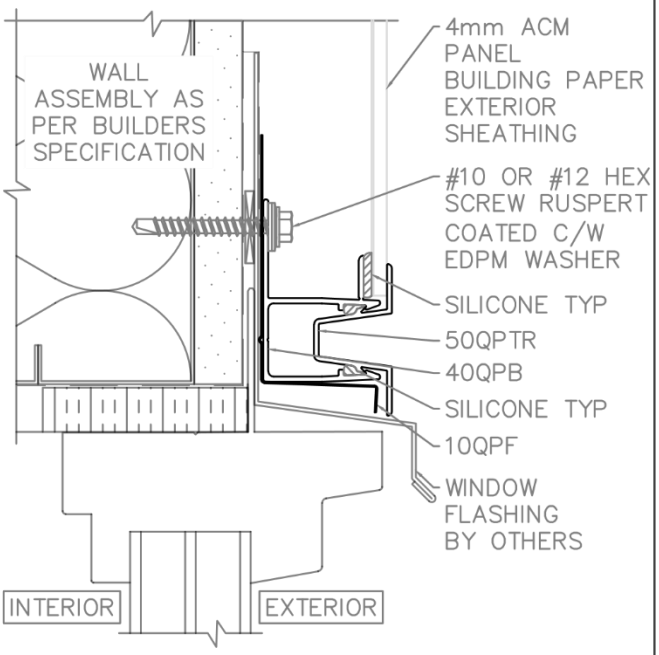

B/8 REVEAL (PROJECTING) WINDOW HEAD DETAIL

NOT TO SCALE

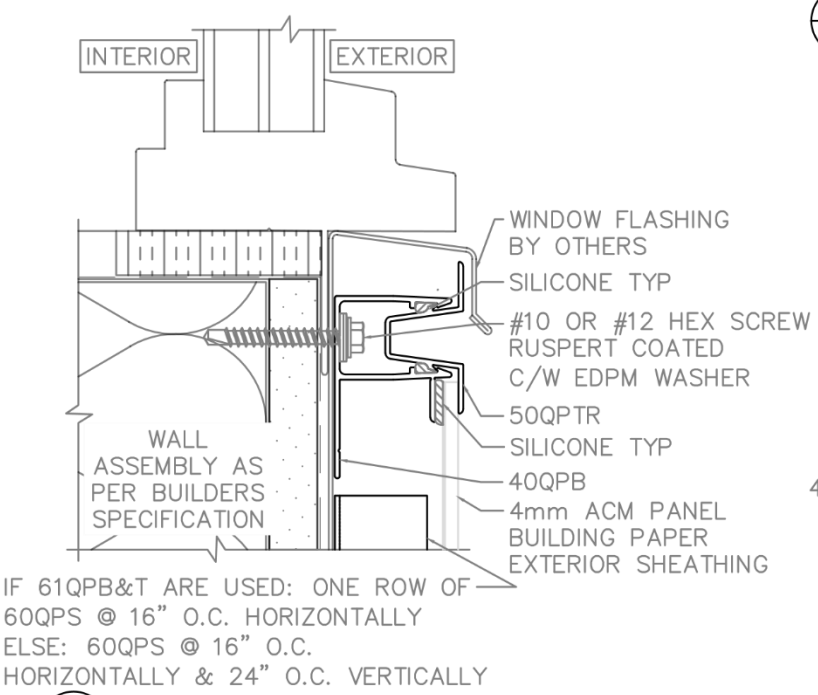

C/8 REVEAL (PROJECTING) WINDOW SILL DETAIL

NOT TO SCALE

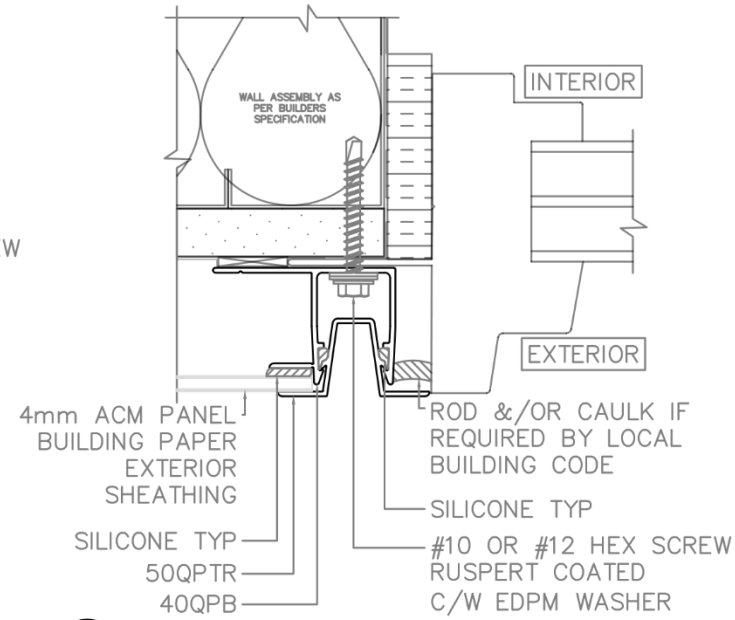

D/8 REVEAL (PROJECTING) WINDOW JAMB DETAIL

NOT TO SCALE

COPYRIGHT © 2026 RESERVED. THESE PLANS AND DESIGNS ARE AT ALL TIMES THE PROPERTY OF BOCA ENGINEERING TO BE USED FOR THE PROJECT SHOWN. WRITTEN CONSENT IS REQUIRED FROM THE ENGINEER BEFORE ANY REPRODUCTION.

BOCA ENGINEERING CO. | SPAR STRUCTURAL & CIVIL CONSULTANTS	DATE SEPTEMBER 23, 2026		4	FOR PUBLICATION		CB
			REV.	ISSUE		APP
	DRAWING NO. 0093-6137-SK1	SHEET NO. 8 OF 13	SCALE NOT TO SCALE	DES. TH	DRN. RQ	CHK. CB
CLIENT ENGAGE BUILDING PRODUCTS INC. QUICKPANEL SYSTEMS	PROJECT QUICKPANEL ACM 4MM IBC AND FBC PRODUCT EVALUATION REPORT		TITLE GENERAL INSTALLATION ASSEMBLY DIAGRAMS			

DRAWING FOR ENGINEERING EVALUATION REPORT 0093-40

NOT FOR USE AS CONSTRUCTION DESIGN DOCUMENTS

www.bocaengineering.com BOCA ENGINEERING CO. info@bocaengineering.com
Greater Victoria Area: (250) 477-7777 203-1001 Cloverdale Ave., Victoria BC V8X 4C9
Metro Vancouver: (604) 385-5210 1567 Brearley St., White Rock BC V4B 3M6

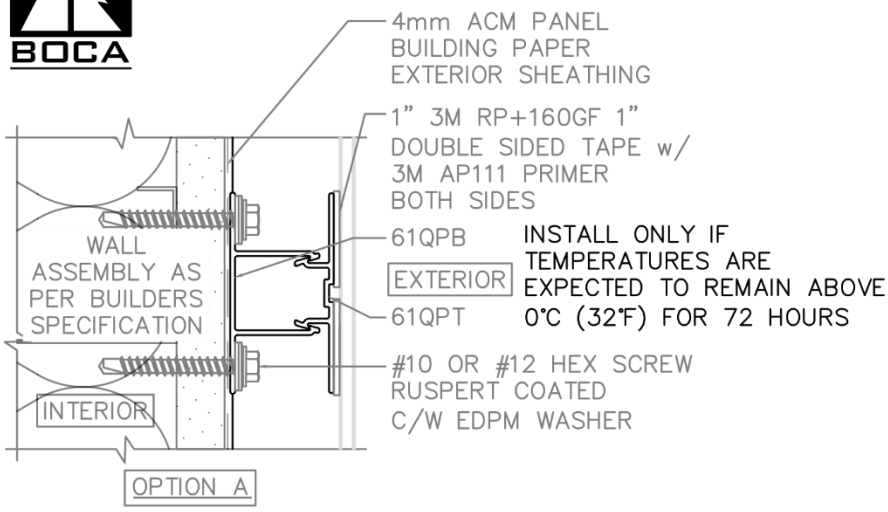

REFER TO TABLE 2
FOR ADHESIVE
CONFIGURATION

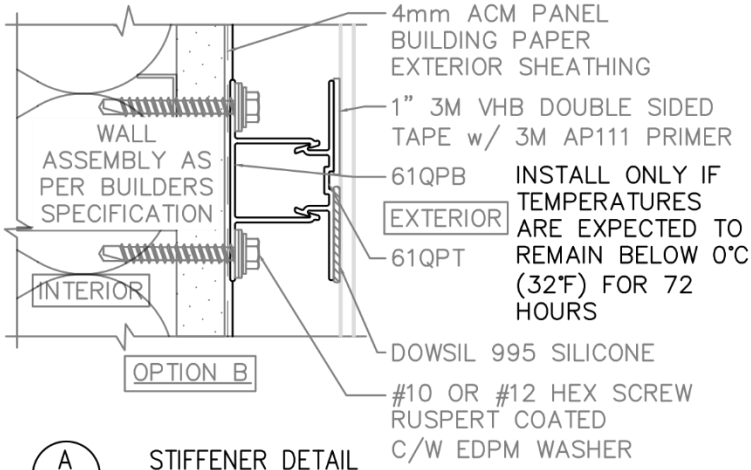

A/9 STIFFENER DETAIL
NOT TO SCALE

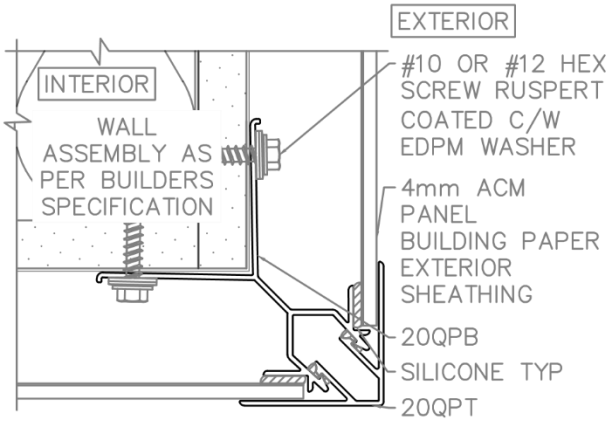

B/9 OUTSIDE CORNER DETAIL
NOT TO SCALE

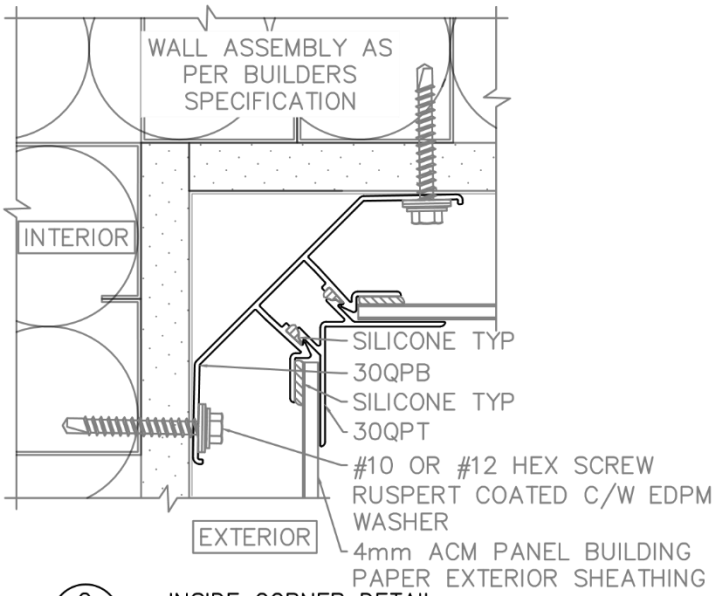

C/9 INSIDE CORNER DETAIL
NOT TO SCALE

COPYRIGHT © 2026 RESERVED. THESE PLANS AND DESIGNS ARE AT ALL TIMES THE PROPERTY OF BOCA ENGINEERING TO BE USED FOR THE PROJECT SHOWN. WRITTEN CONSENT IS REQUIRED FROM THE ENGINEER BEFORE ANY REPRODUCTION.

BOCA ENGINEERING CO. | SPAR STRUCTURAL & CIVIL CONSULTANTS	DATE SEPTEMBER 23, 2026		4 REV.	FOR PUBLICATION ISSUE		CB APP
	DRAWING NO. 0093–6137–SK1	SHEET NO. 9 OF 13	SCALE NOT TO SCALE	DES. TH	DRN. RQ	CHK. CB
CLIENT ENGAGE BUILDING PRODUCTS INC. QUICKPANEL SYSTEMS	PROJECT QUICKPANEL ACM 4MM IBC AND FBC PRODUCT EVALUATION REPORT		TITLE GENERAL INSTALLATION ASSEMBLY DIAGRAMS			

DRAWING FOR ENGINEERING EVALUATION REPORT 0093–40

NOT FOR USE AS CONSTRUCTION DESIGN DOCUMENTS

www.bocaengineering.com BOCA ENGINEERING CO. info@bocaengineering.com
Greater Victoria Area: (250) 477-7777 203-1001 Cloverdale Ave., Victoria BC V8X 4C9
Metro Vancouver: (604) 385-5210 1567 Brearley St., White Rock BC V4B 3M6

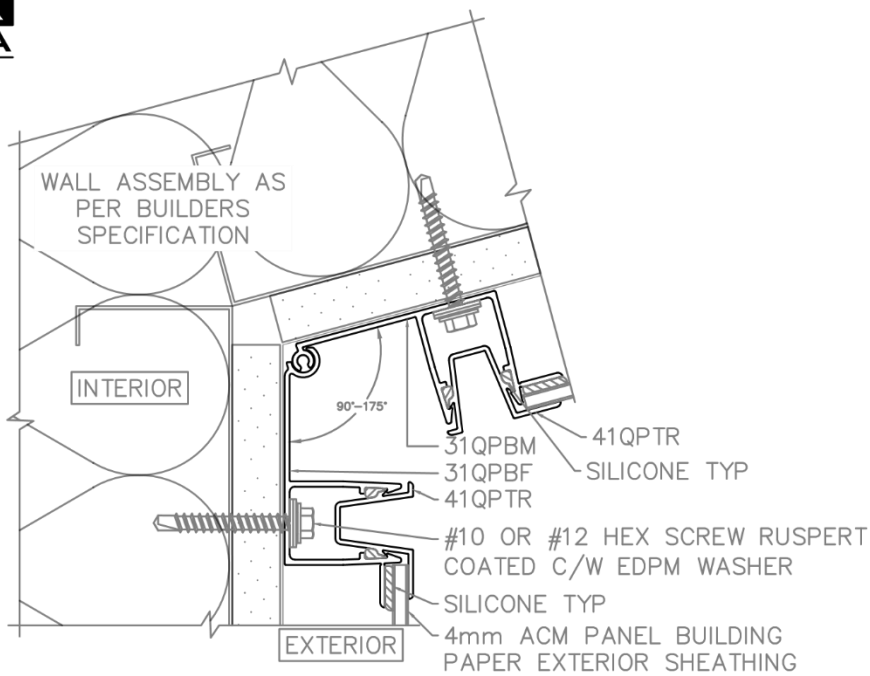

A/10 REVEAL MULTI–ANGLE INSIDE CORNER DETAIL

NOT TO SCALE

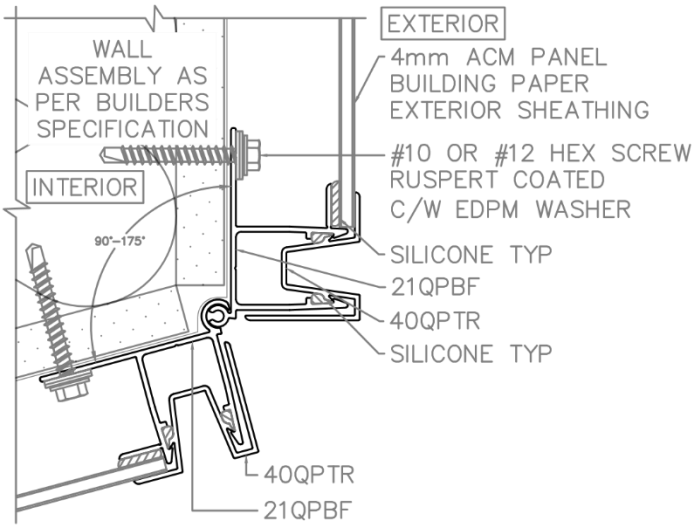

B/10 REVEAL MULTI–ANGLE OUTSIDE CORNER DETAIL

NOT TO SCALE

COPYRIGHT © 2026 RESERVED. THESE PLANS AND DESIGNS ARE AT ALL TIMES THE PROPERTY OF BOCA ENGINEERING TO BE USED FOR THE PROJECT SHOWN. WRITTEN CONSENT IS REQUIRED FROM THE ENGINEER BEFORE ANY REPRODUCTION.

BOCA ENGINEERING CO. | SPAR STRUCTURAL & CIVIL CONSULTANTS	DATE SEPTEMBER 23, 2026		4 REV.	FOR PUBLICATION ISSUE			CB APP
	DRAWING NO. 0093–6137–SK1	SHEET NO. 10 OF 13	SCALE NOT TO SCALE		DES. TH	DRN. RQ	CHK. CB
CLIENT ENGAGE BUILDING PRODUCTS INC. QUICKPANEL SYSTEMS	PROJECT QUICKPANEL ACM 4MM IBC AND FBC PRODUCT EVALUATION REPORT		TITLE GENERAL INSTALLATION ASSEMBLY DIAGRAMS				

DRAWING FOR ENGINEERING EVALUATION REPORT 0093–40

NOT FOR USE AS CONSTRUCTION DESIGN DOCUMENTS

www.bocaengineering.com BOCA ENGINEERING CO. info@bocaengineering.com
Greater Victoria Area: (250) 477-7777 203-1001 Cloverdale Ave., Victoria BC V8X 4C9
Metro Vancouver: (604) 385-5210 1567 Brearley St., White Rock BC V4B 3M6

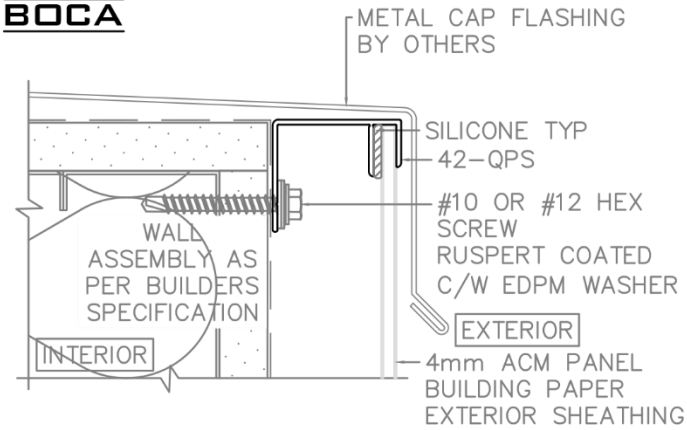

A 11 1–PIECE J TRIM TERMINATION DETAIL

NOT TO SCALE

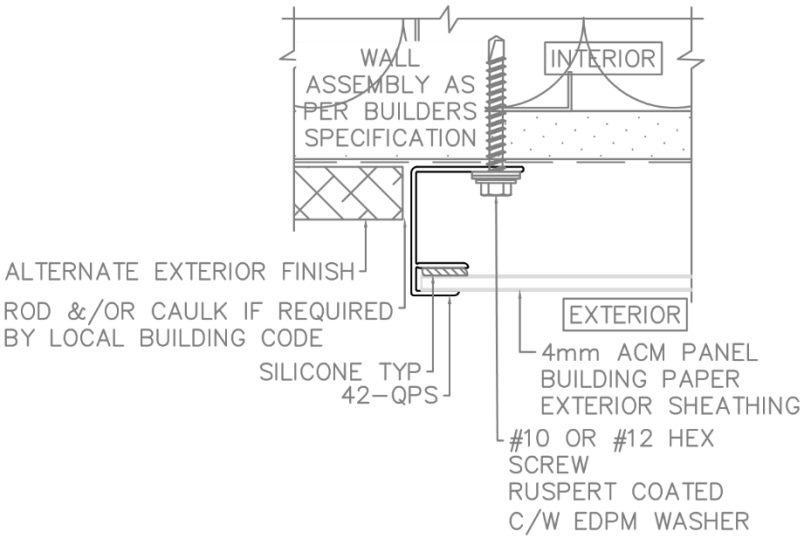

B 11 GENERAL J TRIM DETAIL

NOT TO SCALE

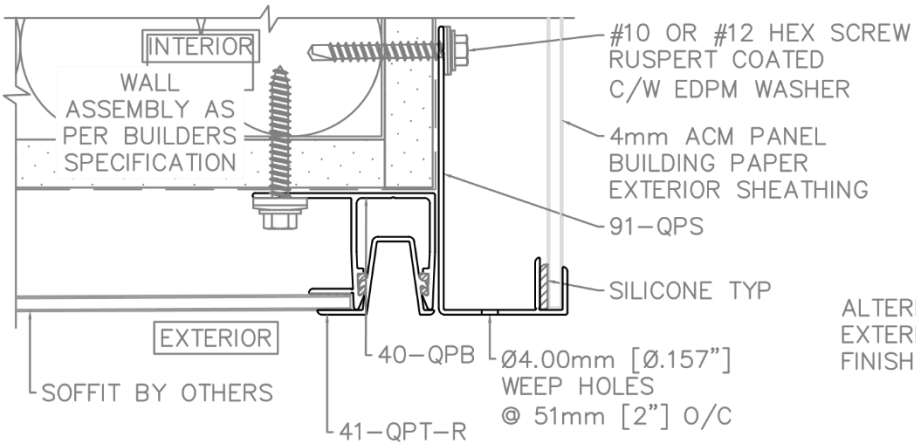

B 11 91QPS TO SOFFIT BY OTHERS DETAIL

NOT TO SCALE

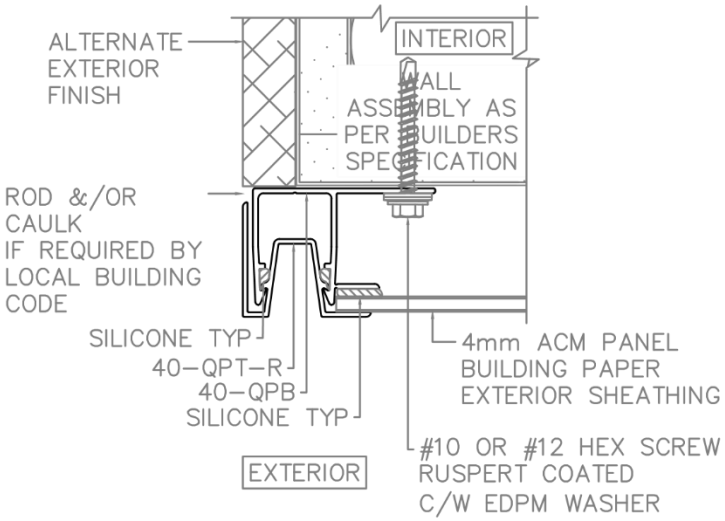

D 11 CORNER TERMINATION DETAIL

NOT TO SCALE

COPYRIGHT © 2026 RESERVED. THESE PLANS AND DESIGNS ARE AT ALL TIMES THE PROPERTY OF BOCA ENGINEERING TO BE USED FOR THE PROJECT SHOWN. WRITTEN CONSENT IS REQUIRED FROM THE ENGINEER BEFORE ANY REPRODUCTION.

BOCA ENGINEERING CO. | SPAR STRUCTURAL & CIVIL CONSULTANTS	DATE SEPTEMBER 23, 2026		4 REV.	FOR PUBLICATION ISSUE		CB APP
	DRAWING NO. 0093–6137–SK1	SHEET NO. 11 OF 13	SCALE NOT TO SCALE	DES. TH	DRN. RQ	CHK. CB
CLIENT ENGAGE BUILDING PRODUCTS INC. QUICKPANEL SYSTEMS	PROJECT QUICKPANEL ACM 4MM IBC AND FBC PRODUCT EVALUATION REPORT		TITLE GENERAL INSTALLATION ASSEMBLY DIAGRAMS			

DRAWING FOR ENGINEERING EVALUATION REPORT 0093–40

NOT FOR USE AS CONSTRUCTION DESIGN DOCUMENTS

www.bocaengineering.com BOCA ENGINEERING CO. info@bocaengineering.com
Greater Victoria Area: (250) 477-7777 203-1001 Cloverdale Ave., Victoria BC V8X 4C9
Metro Vancouver: (604) 385-5210 1567 Brearley St., White Rock BC V4B 3M6

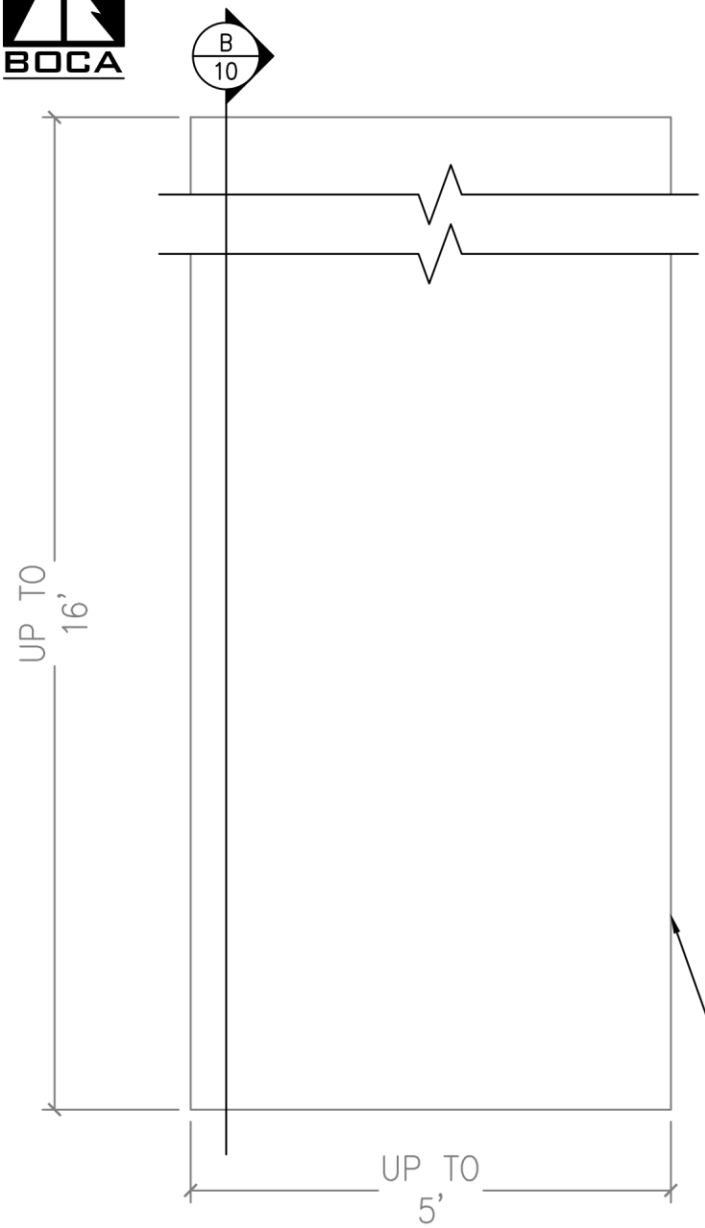

NOTE: PANELS MAY BE CUT TO TSIZE ON JOBSITE

A/12 QUICKPANEL PANEL ELEVATION
NOT TO SCALE

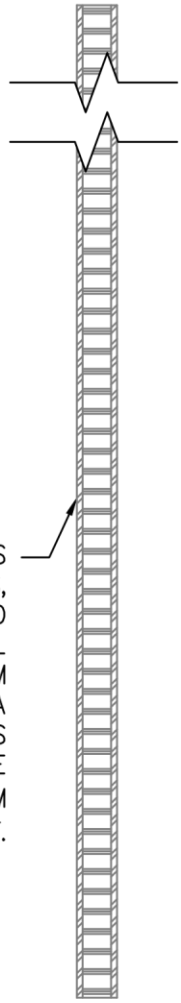

THE COMPOSITE PANEL IS NOMINALLY 4MM IN THICKNESS, COMPOSED OF AN INSIDE AND OUTSIDE SKIN OF NOMINAL 0.5MM THICK ALUMINUM SHEETS BONDED TO A NOMINAL 3MM THICKNESS INNER CORE OF POLYETHYLENE WITH MINERAL (MAGNESIUM HYDROXIDE) FIRE-RETARDANT.

B/12 QUICKPANEL SIDE ELEVATION
NOT TO SCALE

COPYRIGHT © 2026 RESERVED. THESE PLANS AND DESIGNS ARE AT ALL TIMES THE PROPERTY OF BOCA ENGINEERING TO BE USED FOR THE PROJECT SHOWN. WRITTEN CONSENT IS REQUIRED FROM THE ENGINEER BEFORE ANY REPRODUCTION.

BOCA ENGINEERING CO. | SPAR STRUCTURAL & CIVIL CONSULTANTS	DATE SEPTEMBER 23, 2026		4 REV.	FOR PUBLICATION ISSUE			CB APP
	DRAWING NO. 0093-6137-SK1	SHEET NO. 12 OF 13	SCALE NOT TO SCALE		DES. TH	DRN. RQ	CHK. CB
CLIENT ENGAGE BUILDING PRODUCTS INC. QUICKPANEL SYSTEMS	PROJECT QUICKPANEL ACM 4MM IBC AND FBC PRODUCT EVALUATION REPORT		TITLE GENERAL INSTALLATION ASSEMBLY DIAGRAMS				

DRAWING FOR ENGINEERING EVALUATION REPORT 0093-40

NOT FOR USE AS CONSTRUCTION DESIGN DOCUMENTS

www.bocaengineering.com BOCA ENGINEERING CO. info@bocaengineering.com
Greater Victoria Area: (250) 477-7777 203-1001 Cloverdale Ave., Victoria BC V8X 4C9
Metro Vancouver: (604) 385-5210 1567 Brearley St., White Rock BC V4B 3M6

BOCA

TESTING AND CODE COMPLIANCE

1. THE PRODUCT ASSEMBLY SHOWN HAS BEEN EVALUATED ACCORDING TO THE TEST STANDARDS AS OUTLINED IN THE EVALUATION REPORT.
2. THE STRUCTURAL FRAMING AND SHEATHING SHALL BE DESIGNED AND ANCHORED TO PROVIDE LATERAL BRACING AND PROPERLY TRANSFER ALL LOADS TO THE STRUCTURE. FRAMING DESIGN AND INSTALLATION IS THE RESPONSIBILITY OF THE ENGINEER OR ARCHITECT OF RECORD FOR THE PROJECT OF INSTALLATION.
3. THESE DRAWINGS APPLY TO THE TESTING ASSEMBLY ONLY AND DO NOT IMPLY THAT THE SIGNATORY ENGINEER IS THE DESIGNER OF RECORD FOR ANY FUTURE CONSTRUCTION ON WHICH THEY ARE USED.
4. SOME NON-STRUCTURAL COMPONENTS NOT SHOWN AND DO NOT IMPACT STRENGTH FOR ATTACHMENT. TO BE INSTALLED PER CODE AND MAY INCLUDE: FLASHING, INTERIOR INSULATION, INTERIOR FINISH.

INSTALLATION

1. FOR COMPLETE INSTALLATION DETAILS SEE TECHNICAL PRODUCT DATA ON PRODUCT MANUFACTURER'S WEBSITE.
2. THE INSTALLATION DETAILS DESCRIBED ARE OF THE LABORATORY TESTED ASSEMBLY AND MAY NOT REFLECT ACTUAL CONDITIONS FOR A SPECIFIC SITE. IF SITE CONDITIONS DEVIATE FROM THE REQUIREMENTS DETAILED HEREIN, THE JOB ENGINEER OR ARCHITECT PREPARED SITE-SPECIFIC DOCUMENTS SHALL BE USED.

SHEATHING

1. GYPSUM SHEATHING: ASTM C1177, EXTERIOR TYPE.

FASTENERS

1. WOOD SCREWS TO CONFORM TO ASME B18.6.1.
2. METAL SCREWS TO CONFORM TO ASTM C1513.
3. ALL FASTENERS WITH CORROSION-RESISTANT RUSPERT COATING.

FRAMING

1. METAL FRAMING MEMBERS MINIMUM 18 GAUGE U.NO., 33 ksi, IN COMPLIANCE WITH AISI S100-16.
2. WOOD FRAMING MIN. 2x4 WITH SPECIFIC GRAVITY (S.G.) OF 0.42, IN COMPLIANCE WITH US DOC PS20-05.

ALUMINUM

1. ALUMINUM TO CONFORM TO AA ADM 1.

LEGEND AND SYMBOLS

A / 1 — DETAIL NUMBER — SHEET DRAWN

A / 1 — SECTION NUMBER — SHEET DRAWN

ABBREVIATIONS

CONT.	CONTINUOUS
(E)	EXISTING
(N)	NEW
EA.	EACH
E/W	EACH WAY
EXT.	EXTERIOR
EVAL.	EVALUATION
INT.	INTERIOR
EMBED.	EMBEDMENT
H.D.	HOT-DIP
HORZ.	HORIZONTAL
I.D.	INSIDE DIAMETER
O.D.	OUTSIDE DIAMETER
MAX	MAXIMUM
MIN	MINIMUM
NO.	NUMBER
O.C.	ON CENTRE
SPEC.	SPECIFICATION
STGR.	STAGGERED
STRT.	STRAIGHT
TYP.	TYPICAL
VERT.	VERTICAL
U.N.O.	UNLESS NOTED OTHERWISE
W/	WITH

COPYRIGHT © 2026 RESERVED. THESE PLANS AND DESIGNS ARE AT ALL TIMES THE PROPERTY OF BOCA ENGINEERING TO BE USED FOR THE PROJECT SHOWN. WRITTEN CONSENT IS REQUIRED FROM THE ENGINEER BEFORE ANY REPRODUCTION.

BOCA ENGINEERING CO. | SPAR
STRUCTURAL & CIVIL CONSULTANTS

DATE		4	FOR PUBLICATION		CB
SEPTEMBER 23, 2026		REV.	ISSUE		APP
DRAWING NO.	SHEET NO.	SCALE	DES.	DRN.	CHK.
0093-6137-SK1	13 OF 13	NOT TO SCALE	TH	RQ	CB

CLIENT: ENGAGE BUILDING PRODUCTS INC. QUICKPANEL SYSTEMS

PROJECT: QUICKPANEL ACM 4MM IBC AND FBC PRODUCT EVALUATION REPORT

TITLE: GENERAL INSTALLATION ASSEMBLY DIAGRAMS

DRAWING FOR ENGINEERING EVALUATION REPORT 0093-40

NOT FOR USE AS CONSTRUCTION DESIGN DOCUMENTS

www.bocaengineering.com BOCA ENGINEERING CO. info@bocaengineering.com
Greater Victoria Area: (250) 477-7777 203-1001 Cloverdale Ave., Victoria BC V8X 4C9
Metro Vancouver: (604) 385-5210 1567 Brearley St., White Rock BC V4B 3M6

ATTACHMENT 3: DISCUSSION OF TESTING AND DESIGN EVALUATION PROCEDURE

ASCE 7 and the IBC provide guidance information of how to undertake a testing and engineering design analysis to make determining conclusions to the code requirements covered in this report. AA ADM 1 Chapter L, Deflections, and Appendix 1, Testing, provide objective statements that allow for a design by testing approach, affording the design professional and testing laboratory to determine the appropriate reference national standards to use to set testing procedures and deflection limits. The code clearly defines the loading criteria for exterior cladding.

The failure mode in the tests performed was a variety, inclusive of: i) disengagement of the aluminum top cap from the backplate, ii) panel disengaging from top cap, iii) fastener withdrawal, iv) framing yielding, v) adhesives disengaging, vi) sheathing failure. Following ADM 1, App. 1, the test load factors are set to meet or exceed the ASD safety factors (Ω) set within the standard for the respective loading/stress conditions of the aluminum components. The fastening screws and framing are steel, therefore safety factors from AISC 360 and AISI S100 are applied to these components. The respective minimum test load factors based on the individual test failure mode become:

Components	Stress Type	Ω ASD Safety Factor	Ref. Standard /Section
Aluminum stiffener and trims	Bending (rupture)	1.95	ADM 1, F.1
ACM Panel	Bending (rupture)	1.95	ADM 1, F.1
Steel Fastener	Tension	2.0	AISC 360, J3.7
Steel Fastener	Withdrawal	3.0	AISI S100, J4
Steel Framing	Bending	1.67	AISI S100, F2
Adhesive Failure	Shear/Tension	3.0[1]	Note 1
Sheathing Failure	Shear/Bending	3.0[1]	Note 1

1. These materials do not possess code-referenced national standards with published safety factors of stress failure modes. Typical good engineering practice would to be use S.F. of 3 in such case.

By review of the table, it is shown that the appropriate system test factor is in the range of 2.0 - 3.0 to the service-level design loads.

It is also common practice to run system structural tests that possess a variety of different material types and potential failure modes, such as this case, and assign a system test factor regardless of failure mode. IBC 1709.3, *Preconstruction Load Tests*, *Load Test Procedures Not Specified*, assigns the resulting allowable load of such tests to be taken as the lesser of the test load at the deflection limit (ref. Ch. 16) or the maximum load divided by 2.5. The testing criteria of IBC 1709.3 has been employed in this design evaluation.

Wall Framing Component Strength of Attachments

The maximum design wind pressures published in the report are exclusive to the tested strength of the cladding materials and the connection strength in to the wall framing. In many cases the actual design wind pressure would be less than the capacity of the cladding system. In any such and all cases in a building design, the actual design pressure imparted by the cladding in to the building framing (and all other forces imparted in to the framing) should be used to design the building framing members.

There are many variables that would be considered in the building frame design. The minimum framing members specified in this report to accept the cladding attachment forces would not necessarily adequately serve the overall

building design loads and deflection limits. This is why the design tables and diagrams in the report advise that design capacity of "the building framing is outside the scope of this report and must be designed and installed for the applicable wind, climate and occupancy loads" of the building project. The variables in the framing design, including but not limited to the height of walls, whether they are vertical load-bearing or non-bearing, and the contribution of other climate loads along with the wind force transferred through the cladding, must all be taken in to account when specifying the structural components that the cladding will attach in to.

Deflection Limits

The bending deflection limits set for this design evaluation are L/180 for the deflection of the wall frame, and L/60 for the differential movement of the cladding member relative to the wall frame. With these deflection limits tested at the maximum wall height of 10 ft and cladding anchorage spans regarded as the maximum span in-between each location where the cladding is supported, the cladding panels were found to not dislodge or distort and return to the set position after releasing the service-level design loads as published. In-plane lateral deflection limits of the system were not assessed.

Weather Protection and Drainage

IBC 1402.2, Weather Protection, says "… Buildings shall be provided with a weather-resistant exterior wall assembly. The exterior wall assembly shall include: 1) flashing, as described in Section 1404.4. The exterior wall assembly shall be designed and constructed in such a manner as to prevent the accumulation of water within the exterior wall assembly by providing a 2) water-resistive barrier behind the exterior veneer, as described in Section 1403.2, and 3) a means for draining water that enters the assembly to the exterior…"

There is an exception that allows for a 2-hr ASTM E331 test of the construction mock-up to be conducted and to where "the exterior wall envelope design shall be considered to resist wind-driven rain where the results of testing indicate that water did not penetrate control joints in the exterior wall envelope, joints at the perimeter of openings or intersections of terminations with dissimilar materials."

In a testing-based code-compliance assessment the way to prove that the wall cladding system works to defend against pressurized water entrance and provide drainage in accordance with IBC 1402.2 is to test. When the code does not provide a specific testing standard for a given performance requirement, an appropriate national or international standard published by a body accredited by American National Standards Institute (ANSI) is chosen. AAMA 508 and 509 testing has commonly been employed by industry to verify exterior walls system resistance to wind-driven rain and the means of drainage.

The evaluation has considered a construction mock-up test to AAMA 508-21 of Quickpanel 4mm ACM installed with typical horizontal and vertical joints and horizontal stiffeners at 24" o/c (ref. assemblies QI1, QI2, QI10 in Table 2 of this report), and that passing results verify that as per AAMA 508-21 Sections 6.6 and 6.7, "no water shall appear inboard of the simulated AWB (sheathing)" after 15-minute exposures to both static water pressure (run at 6.2 psf) and dynamic water pressure (run at 32 mph/6.2 psf), showing adequate proof that the intent of IBC 1402.2 has been met. Designers and regulators should consider that wind-driven rain design pressures are generally taken at around 15% of the allowable maximum wind design pressure, though there is no definite code-reference that dictates this as a design value.

ATTACHMENT 4: INTERNATIONAL TO STATE CODE CROSS-REFERENCES

FLORIDA: 2026 FLORIDA BUILDING CODE (FBC)

FBC CATEGORY: Panel Walls
SUB-CATEGORIES: Siding

Table 4: 2026 FBC to 2024 IBC Cross-referenced Sections

IBC Section[1]	FBC Section	Description	Referenced Standard or Code Section[2]	Year	FBC Comparison to IBC
104.2.2.4	104.11.2	Tests	-	-	Article content similar to IBC
718.2.6	718.2.6	Exterior Wall Coverings	NFPA 285	2022	Article content similar to IBC, referenced standard edition differs
1402.2	1403.2	Exterior Walls, Weather Protection	-	-	Article content same as IBC
1402.3	1403.3	Exterior Walls, Wind Resistance	FBC Ch 16	-	Article content same as IBC
N/A	1403.5.2	Vertical and Lateral Flame Propagation	FBC Section 1407 , NFPA 285	2019	Section added in FBC
1402.6	1403.6	Exterior Walls, Water Resistive Barriers	NFPA 285	2022	Article content similar to IBC, referenced standard edition differs
1406	1407	Metal Composite Materials (MCM)	-	-	Article content same as IBC
1406.2	1407.2	Exterior Wall Finish	FBC 1407.4 through 1407.14	-	Article content same as IBC
1406.4	1407.4	Structural Design	FBC Ch 16	-	Article content same as IBC
1406.5	1407.5	Approval	-	-	Article content same as IBC
1406.6	1407.6	Weather Resistance	-	-	Article content same as IBC
1406.7	1407.7	Durability	-	-	Article content same as IBC
1406.9	1407.9	Surface Burning Characteristics	ASTM E84	2024	Article content same as IBC, referenced standard edition differs
1406.10	1407.10	Type I,II,III,IV Construction	-	-	Article content same as IBC
1406.10.1	1407.10.1	Surface Burning Characteristics	ASTM E84	2024	Article content same as IBC, referenced standard edition differs
1406.10.2	1407.10.2	Thermal Barriers	-	-	Article content same as IBC
1406.10.3	1407.10.4	Full Scale Tests	NFPA 285	2022	Article content similar to IBC, referenced standard edition differs
1406.11	1407.12	Type V Construction	-	-	Article content same as IBC
1406.13	1407.14	Labeling	FBC 1703.5	-	Article content same as IBC
1609.1.1	1609.1.1	Determination of Wind Loads	ASCE 7	2022	Article content similar to IBC
1709.3	1709.3	Load Test Procedures Not Specified	ASTM E330	2014(21)	Article content same as IBC
2002.1	2002.1	Aluminum General	AA ADM 1, Ch 16	2020	Article content similar to IBC
2603.5.5	2603.5.5	Vertical and Lateral Fire Propagation	NFPA 285	2022	Article content similar to IBC, referenced standard edition

					differs
CH 35	CH 35	Referenced Standards	ASTM E331	2000(23)	Article content same as IBC, referenced standard edition differs

1. IBC equivalent sections are listed in comparison to the corresponding state code.
2. Only the applicable reference standards and code sections cited in the main body text and this attachment are listed. (-) indicates that the main body text or this attachment covers the full explanation of the objective.

FLORIDA: 2026 FLORIDA RESIDENTIAL CODE (FBC-R)

Table 5: 2026 FBC-R to 2024 IRC Cross-referenced Sections

IRC Section[1]	FBC-R Section	Description	Referenced Standard or Code Section[2]	Year	FBC-R Comparison to IRC
R301.1.3	R301.1.3	Engineered Design	-	-	Article content similar to IRC
R302	R302	Fire Resistant Construction	ASTM E119	2020	Article content similar to IRC
R703.1.1	R703.1.1	Wall Covering, Water Resistance	ASTM E331	2000(23)	Article content similar to IRC, referenced standard edition differs
R703.1.2	R703.1.2	Wall Covering, Wind Resistance	ASTM E330	2014(21)	Article content similar to IRC
R703.1.2	R703.1.2	Wall Covering, Wind Resistance	Tables R301.2(2) and R301.2(3)	-	Article content similar to IRC
R703.3	R703.3	Nominal Thickness and Attachments	Table R703.3(1)	-	Article content similar to IRC
R703.3.2	R703.3.1	Wind Limitations	Tables R703.3.1, R301.2(2) and R301.2(3)	-	Article content similar to IRC

1. IBC equivalent sections are listed in comparison to the corresponding state code.
2. Only the applicable reference standards and code sections cited in the main body text and this attachment are listed. (-) indicates that the main body text or this attachment covers the full explanation of the objective.

Additional Limitations: Florida Building Code (FBC) Only

For installation in areas within 3,000 ft. of a saltwater coastline, fasteners used must comply with FBC Section 1711.

-END-